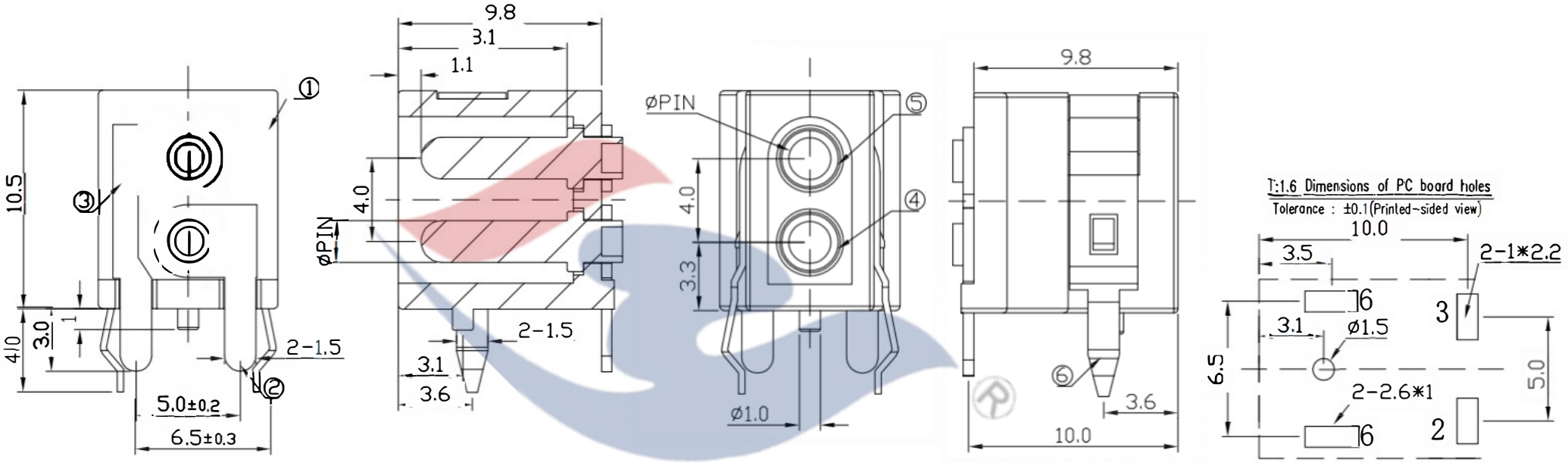

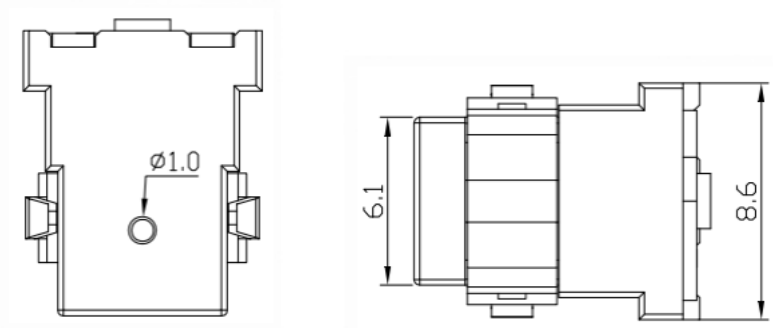

SCHEMATIC

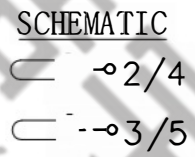

PIN	Φ2.1	Φ2.5
APPD		

Tel：0769-82310511-867

SPECIFICATION

1.Rating ：DC 30V 5A；
2.Contact resistance：≤0.03Ω；
3.Insulation resistance：≥100MΩ (DC250V)；
4.Withstand voltage：500VAC ；
5.Insertion and extraction force：3-20N；
6.life test：5,000 cycles，

NO.	DESCRIPTION	QTY	MATERIAL	PLATING
6	COVER	1	H65 BRASS	CuSn-Plating
5	CONTACT	1	H59 BRASS	Cu-Sn-Plating
4	FOOT	1	H59 BRASS	Cu-Sn-Plating
3	SPRING	1	H62 BRASS	Ag-Plating
2	FLAT PIECE	1	H62 BRASS	Ag-Plating
1	HOUSING	1	PA66	

UNIT: MM	TYPE:	MODEL NO:	PAPER NO:		PAGE 1 OF 1	
	DC JACK	AC-201	TOLERANCE	ANGLES	SCALE	VER
			±0.15	±1.5°	3:1	1
DESIGNER BY:		东莞市弘皓电子有限公司				
CHECK BY:						
APPROVED BY:						

HOOYA ELECTRONICS