Ultra-low Power Consumption LDO — MD52XX Series

CMOS Voltage Regulator With ON/OFF Switch — 500mA

MD52XX is ultra-low power consumption low dropout voltage regulator (LDO) manufactured in CMOS processes. It can deliver up to 500mA of current while consuming only 0.6μA of quiescent current. It consists of a reference voltage generator, an error amplifier, a current foldback circuit, and a phase compensation circuit plus a driver transistor. The MD52XX is designed specifically for applications where very-low I_Q is a critical parameter. This device maintains low quiescent current consumption even in dropout mode to further increase the battery life.

■ Features:

- Ultra-low Quiescent Current: 0.6μA
- Highly Accurate: ±2%
- Dropout Voltage: 230mV@I_{OUT}=500mA
- Maximum Output Current: 500mA
- Input Voltage Range: 2.2V~7.0V
- Temperature Stability: ±50ppm/℃
- ON/OFF Logic = Enable High
- Standby Current: 10nA
- C_{OUT} Discharge Circuit when EN Disable is Active
- Protections Circuits: Current Limiter, Short Circuit, Foldback
- Output Capacitor: Low ESR Ceramic Capacitor Compatible

■ Applications:

- Smart wearer
- Long-life battery-powered devices
- Portable mobile devices, such as mobile phones, cameras, and so on
- Wireless communication equipment

■ Typical Applications:

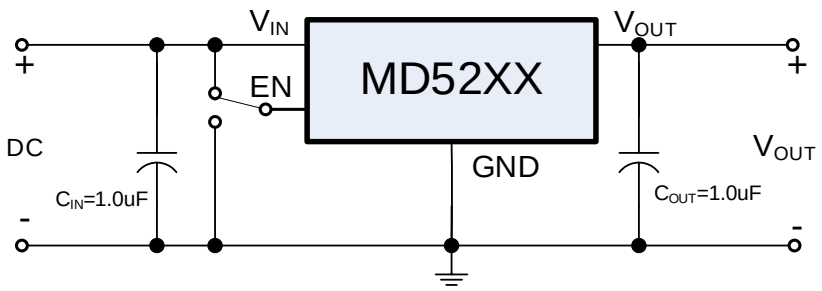

■ Pin Configuration:

SOT23-5L
Top View

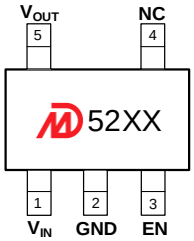

SOT23-3L
Top View

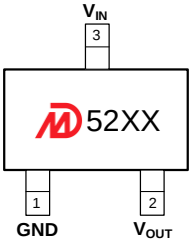

SOT89-3L(A_Type)
Top View

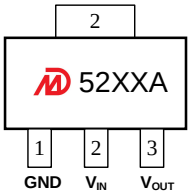

DFN1*1-4L
Top View

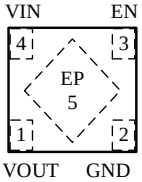

■ Product Selections:

Product Name	V_{OUT} (V)	Package	Ordering Name	Marking	Package Information
MD5212	1.2	SOT23-5L	MD52E12QC3	5212	Tape and Reel, 3000pcs
MD5215	1.5	SOT23-5L	MD52E15QC3	5215	
MD5218	1.8	SOT23-5L	MD52E18QC3	5218	
MD5221	2.1	SOT23-5L	MD52E21QC3	5221	
MD5225	2.5	SOT23-5L	MD52E25QC3	5225	
MD5228	2.8	SOT23-5L	MD52E28QC3	5228	
MD5230	3.0	SOT23-5L	MD52E30QC3	5230	
MD5233	3.3	SOT23-5L	MD52E33QC3	5233	
MD5236	3.6	SOT23-5L	MD52E36QC3	5236	
MD5237	3.7	SOT23-5L	MD52E37QC3	5237	
MD5240	4.0	SOT23-5L	MD52E40QC3	5240	
MD5250	5.0	SOT23-5L	MD52E50QC3	5250	
MD5212	1.2	SOT23-3L	MD52E12QA3	5212	
MD5215	1.5	SOT23-3L	MD52E15QA3	5215	
MD5218	1.8	SOT23-3L	MD52E18QA3	5218	
MD5221	2.1	SOT23-3L	MD52E21QA3	5221	
MD5225	2.5	SOT23-3L	MD52E25QA3	5225	
MD5228	2.8	SOT23-3L	MD52E28QA3	5228	
MD5230	3.0	SOT23-3L	MD52E30QA3	5230	
MD5233	3.3	SOT23-3L	MD52E33QA3	5233	
MD5236	3.6	SOT23-3L	MD52E36QA3	5236	
MD5237	3.7	SOT23-3L	MD52E37QA3	5237	
MD5240	4.0	SOT23-3L	MD52E40QA3	5240	
MD5250	5.0	SOT23-3L	MD52E50QA3	5250	
MD5212A	1.2	SOT89-3L	MD52A12PA1	5212A	Tape and Reel, 1000pcs
MD5215A	1.5	SOT89-3L	MD52A15PA1	5215A	
MD5218A	1.8	SOT89-3L	MD52A18PA1	5218A	

MD5221A	2.1	SOT89-3L	MD52A21PA1	5221A	
MD5225A	2.5	SOT89-3L	MD52A25PA1	5225A	
MD5228A	2.8	SOT89-3L	MD52A28PA1	5228A	
MD5230A	3.0	SOT89-3L	MD52A30PA1	5230A	
MD5233A	3.3	SOT89-3L	MD52A33PA1	5233A	
MD5236A	3.6	SOT89-3L	MD52A36PA1	5236A	
MD5237A	3.7	SOT89-3L	MD52A37PA1	5237A	
MD5240A	4.0	SOT89-3L	MD52A40PA1	5240A	
MD5250A	5.0	SOT89-3L	MD52A50PA1	5250A	
MD5212	1.2	DFN1*1-4L	MD52E12WB6	5212	Tape and Reel, 10000pcs
MD5215	1.5	DFN1*1-4L	MD52E15WB6	5215	
MD5218	1.8	DFN1*1-4L	MD52E18WB6	5218	
MD5221	2.1	DFN1*1-4L	MD52E21WB6	5221	
MD5225	2.5	DFN1*1-4L	MD52E25WB6	5225	
MD5228	2.8	DFN1*1-4L	MD52E28WB6	5228	
MD5230	3.0	DFN1*1-4L	MD52E30WB6	5230	
MD5233	3.3	DFN1*1-4L	MD52E33WB6	5233	
MD5236	3.6	DFN1*1-4L	MD52E36WB6	5236	
MD5237	3.7	DFN1*1-4L	MD52E37WB6	5237	
MD5240	4.0	DFN1*1-4L	MD52E40WB6	5240	
MD5250	5.0	DFN1*1-4L	MD52E50WB6	5250	

Notes: 1* Customer can request to customize the output voltage ranged from 1.2V to 5V if desired voltage is not found in the selections.

2* Customer can request customization of package choice.

3* Please pay attention to the MARKING of the product package type.

■ Absolute Maximum Ratings:

(Unless otherwise indicated**:** T_a=25℃**)**

PARAMETER	SYMBOL	RATINGS		UNITS
Input Voltage	V_{IN}	-0.3 ~ 8		V
Output Voltage	V_{OUT}	Vss-0.3 ~ VIN+0.3V		
Power Dissipation	P_D	SOT23-5	250	mW
		SOT23-3	250	
		SOT89-3	1000	
		DFN1*1-4L	200	
Thermal Resistance	$R_{\theta JB}$ (1)	SOT23-5	180	℃/W
		SOT23-3	200	
		SOT89-3	100	
		DFN1*1-4L	160	
Operating Ambient Temperature	T_{opr}	-40 ~ +85		℃
Storage Temperature	T_{stg}	-40 ~ +125		
ESD Protection	ESD HBM	6000		V

Note: Stresses above those listed under “Absolute Maximum Ratings” may cause permanent damage to the device.

(1) Mounted on JEDEC standard 4layer (2s2p) PCB test board

■ Notes on Use:

Input Capacitor (C_{IN}): 1.0µF above

Output Capacitor (C_{OUT}):1.0µF above

■ Electrical Characteristics:

MD52XX Series (Unless otherwise indicated：T_a=25℃)

PARAMETER	SYMBOL	CONDITIONS	MIN.	TYP.	MAX.	UNIT
Output Voltage*1	$V_{OUT(S)}$	$V_{IN}=V_{OUT(S)}+2.0V$ I_{OUT}=10mA, $V_{OUT(S)}$<2.0V	$V_{OUT(S)}$-0.03	$V_{OUT(S)}$	$V_{OUT(S)}$+0.03	V
		$V_{IN}=V_{OUT(S)}+1.0V$ I_{OUT}=10mA, $V_{OUT(S)}$≥2.0V	$V_{OUT(S)}$×0.98		$V_{OUT(S)}$×1.02	
Dropout Voltage*2	V_{DROP}	$V_{EN}=V_{IN}$, V_{OUT}<3V I_{OUT}=500mA		240		mV
		$V_{EN}=V_{IN}$, V_{OUT}≥3V I_{OUT}=500mA		230		
Line Regulation*3	$\frac{\Delta V_{OUT}}{\Delta V_{IN} \bullet V_{OUT(s)}}$	$V_{OUT(S)}+0.5V \le V_{IN}=V_{EN} \le 7V$ I_{OUT}=10mA		0.05	0.1	%/V
Load Regulation	ΔV_{OUT2}	$V_{IN}=V_{EN}=V_{OUT(S)}+1.0V$ 1mA≤I_{OUT}≤500mA		50	90	mV
Temperature Stability	$\frac{\Delta V_{OUT}}{\Delta T_a \bullet V_{OUT(s)}}$	$V_{IN}=V_{EN}=V_{OUT(S)}+1.0V$ I_{OUT}=1mA -40℃≤T_a≤125℃		±50		ppm/℃
GND Current ($V_{EN}=V_{IN}$)	I_{GND}	no load		0.6	0.9	μA
		I_{OUT}=500mA		210		μA
Shutdown Current (V_{EN}=0)	I_{SHUT}	V_{IN}=7.0V, V_{EN}=0		0.01	0.1	μA
Input Voltage	V_{IN}	---	2.2		7	V
Maximum Output Current	I_{OUTMAX}		450	500		mA
Current Limit*4	I_{LIM}	$V_{IN}=V_{EN}=V_{OUT(S)}+1.0V$ V_{OUT} = 0.95 ×$V_{OUT(S)}$		750		mA
Short Circuit Current	I_{SHORT}	$V_{IN}=V_{EN}=V_{OUT(S)}+1.0V$ V_{OUT}=0V		50		mA
C_{OUT} Auto Discharge	R_{DCHG}	V_{EN}=0, $V_{OUT}=V_{OUT(S)}$	280	450	640	Ω
Power Supply Rejection Ratio	PSRR	f=10Hz, I_{OUT}=10mA		64		dB
		f=100Hz, I_{OUT}=10mA		51		
		f=1kHz, I_{OUT}=10mA		34		
EN 'H' Level Voltage	V_{ENH}	---	1.0		7.0	V
EN 'L' Level Voltage	V_{ENL}	---	0		0.38	
EN 'H' Level Current	I_{ENH}	V_{IN}=7.0V, $V_{EN}=V_{IN}$	-0.1		0.1	μA
EN 'L' Level Current	I_{ENL}	V_{IN}=7.0V, V_{EN}=0	-0.1		0.1	

Notes：

1. $V_{OUT(S)}$: Output voltage when $V_{IN}=V_{OUT}$+1V, I_{OUT}=1 mA.
2. $V_{DROP}=V_{IN1}$ -（$V_{OUT(S)}$× 0.98）where V_{IN1} is the input voltage when V_{OUT} = $V_{OUT(S)}$× 0.98.
3. Minimum $V_{IN}=V_{OUT}$+0.5V or 2.2V, whichever is greater.
4. I_{LIM}: Output current when $V_{IN}=V_{OUT(S)}$+1V and V_{OUT} = 0.95*$V_{OUT(S)}$.

■ Typical Performance Characteristics:

Test Conditions: $V_{IN}=V_{OUT}+1.0V$, $C_{IN}=1.0\mu F$, $C_{OUT}=1.0\mu F$, $T_a=25℃$, unless otherwise indicated.

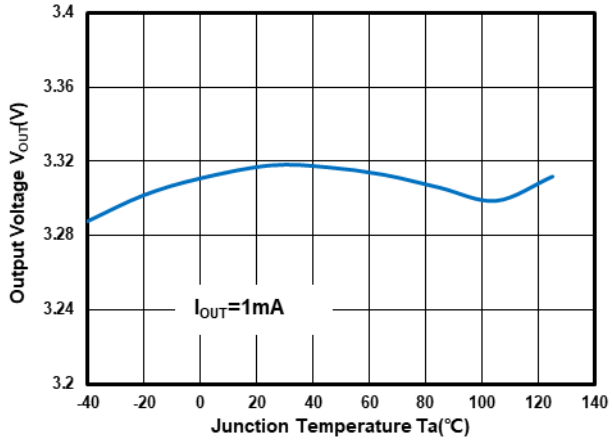

Output Voltage vs. Temperature at V_{OUT}=3.3V

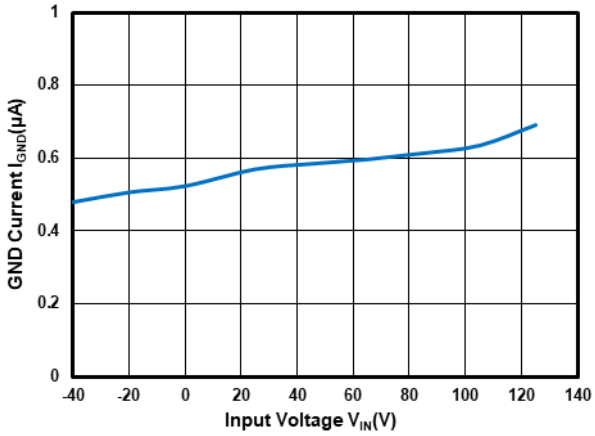

GND Current vs. Temperature at V_{OUT}=3.3V

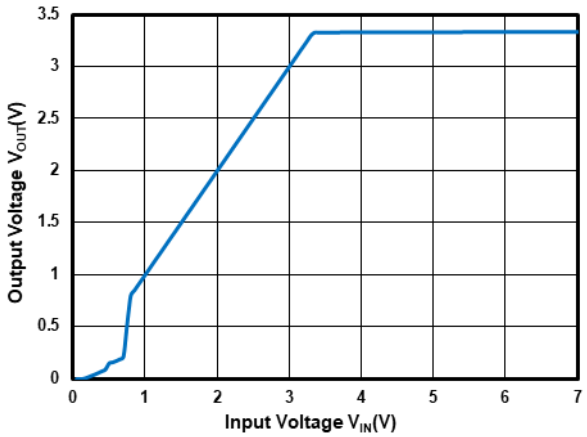

Output Voltage vs. Input Voltage at V_{OUT}=3.3V

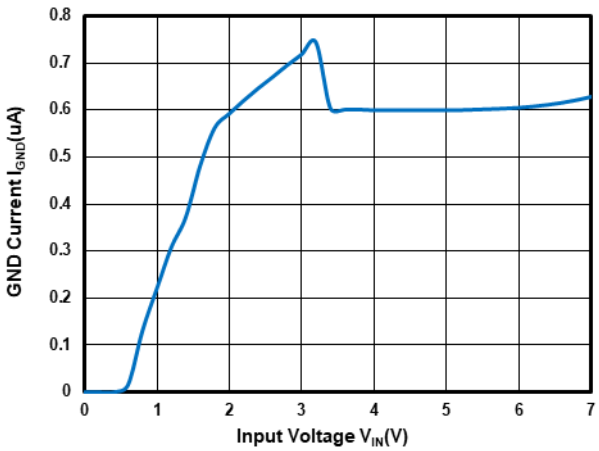

GND Current vs. Input Voltage at V_{OUT}=3.3V

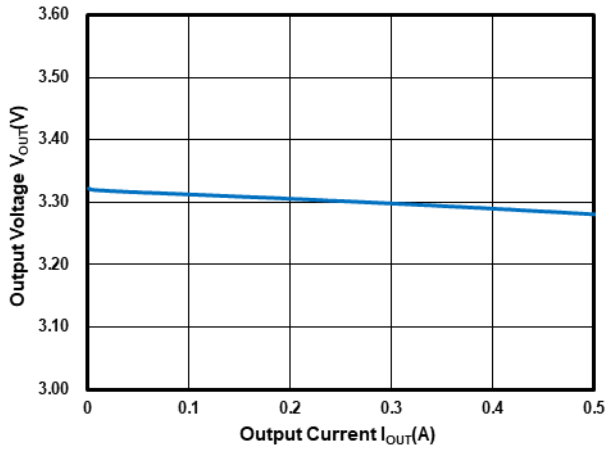

Output Voltage vs Output Current at V_{OUT}=3.3V

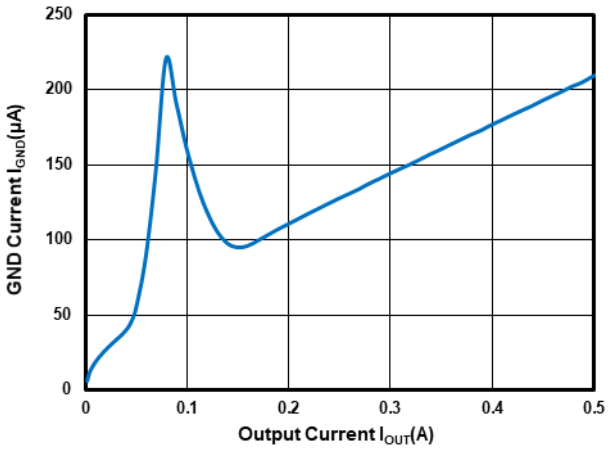

GND Current vs Output Current at V_{OUT}=3.3V

■ Typical Performance Characteristics (Continued):

Test Conditions: $V_{IN}=V_{OUT}+1.0V$, $C_{IN}=1.0\mu F$, $C_{OUT}=1.0\mu F$, $T_a=25℃$, unless otherwise indicated.

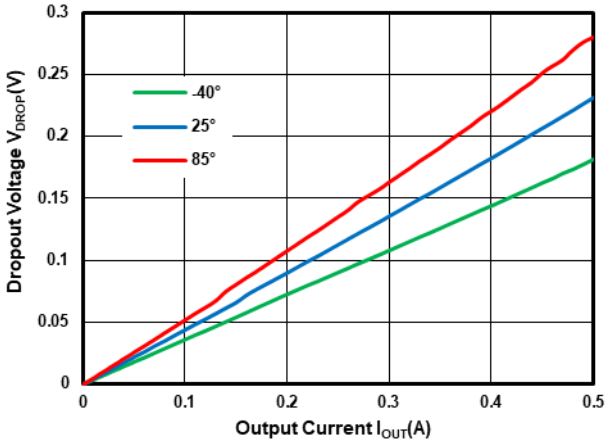

Dropout Voltage vs. Output Current at $V_{OUT}=3.3V$

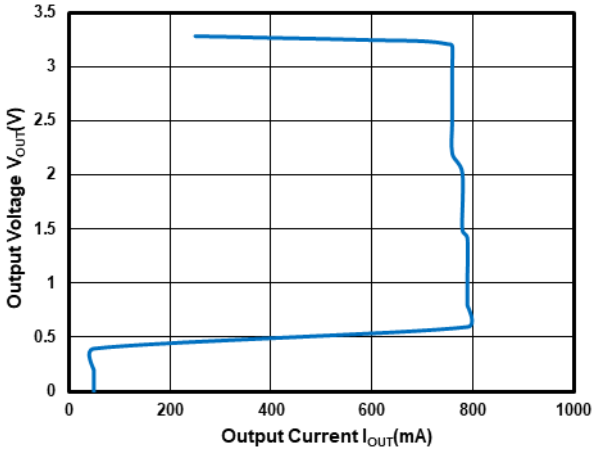

Output Current Fold-back at $V_{OUT}=3.3V$

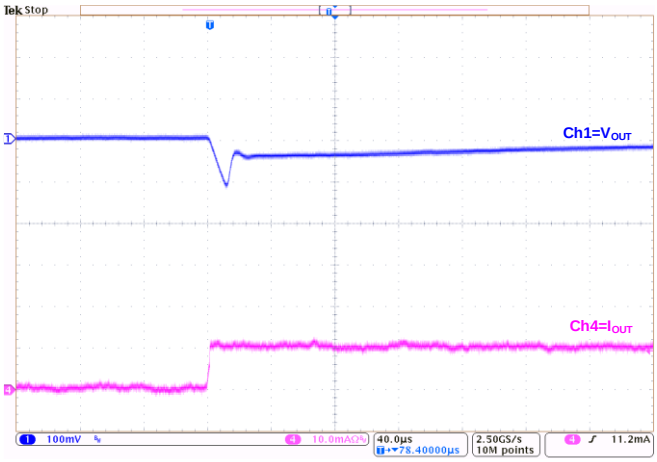

Load Transient at $V_{OUT}=3.3V$:

(I_{OUT}=0mA~10mA)

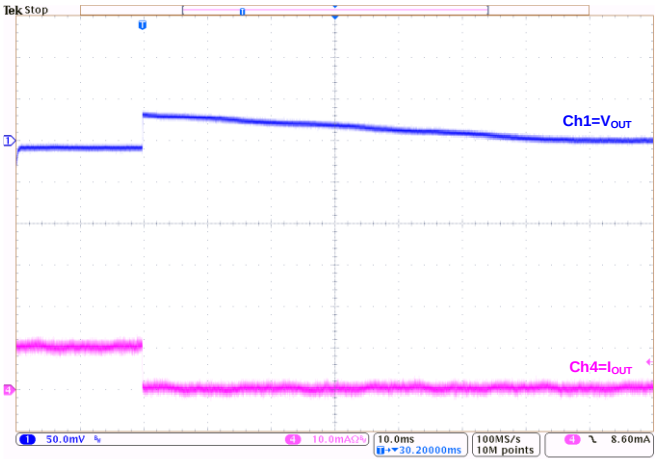

Load Transient at $V_{OUT}=3.3V$:

(I_{OUT}=10mA~0mA)

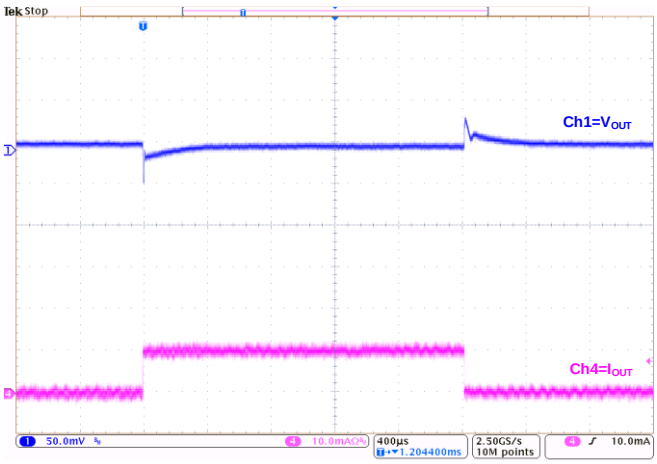

Load Transient at $V_{OUT}=3.3V$:

(I_{OUT}=1mA~10mA~1mA)

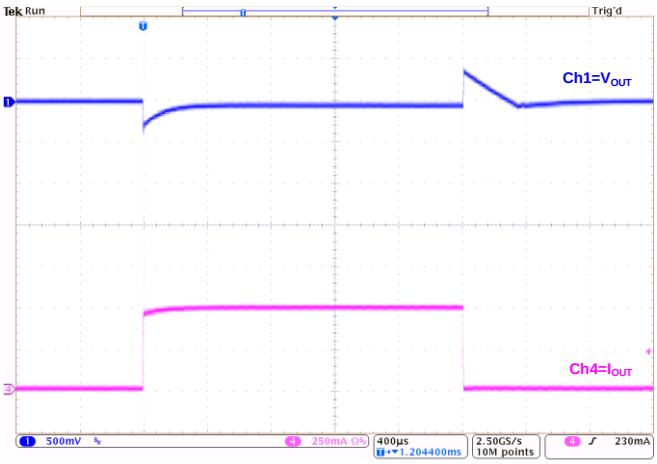

Load Transient at $V_{OUT}=3.3V$:

(I_{OUT}=1mA~500mA~1mA)

■ Typical Performance Characteristics (Continued):

Test Conditions: $V_{IN}=V_{OUT}+1.0V$, $C_{IN}=1.0\mu F$, $C_{OUT}=1.0\mu F$, $T_a=25℃$, unless otherwise indicated.

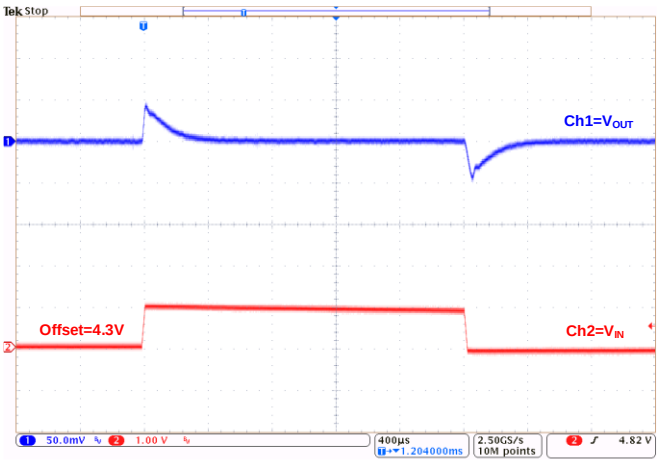

Line Transient at V_{OUT}=3.3V:

(I_{OUT}=1mA)

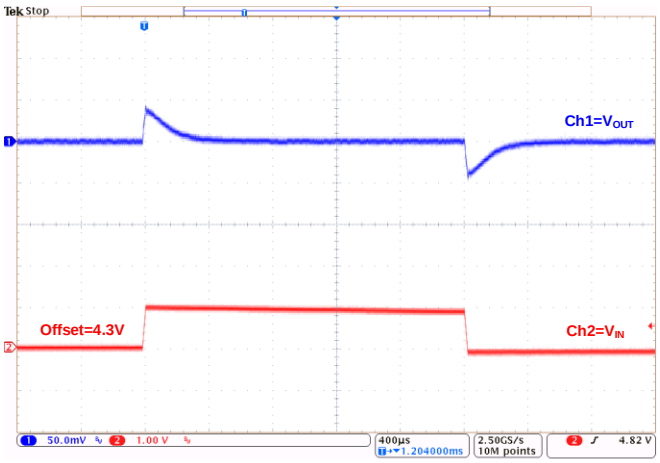

Line Transient at V_{OUT}=3.3V:

(I_{OUT}=10mA)

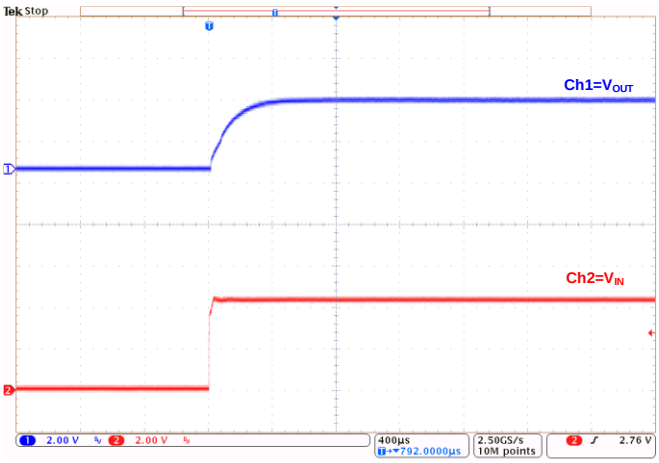

Power Up at V_{OUT}=3.3V:

(I_{OUT}=1mA)

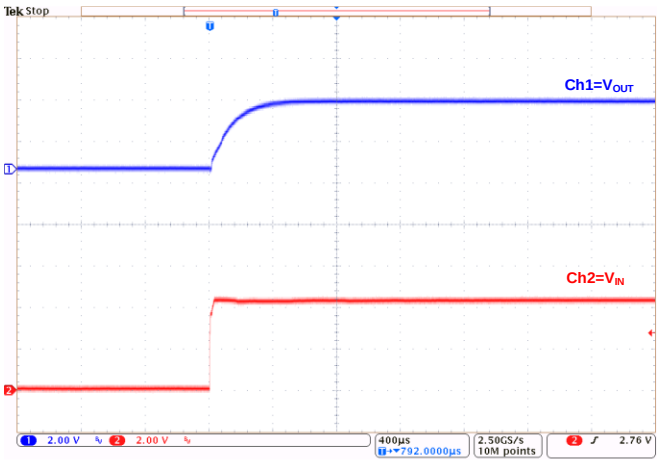

Power Up at V_{OUT}=3.3V:

(I_{OUT}=500mA)

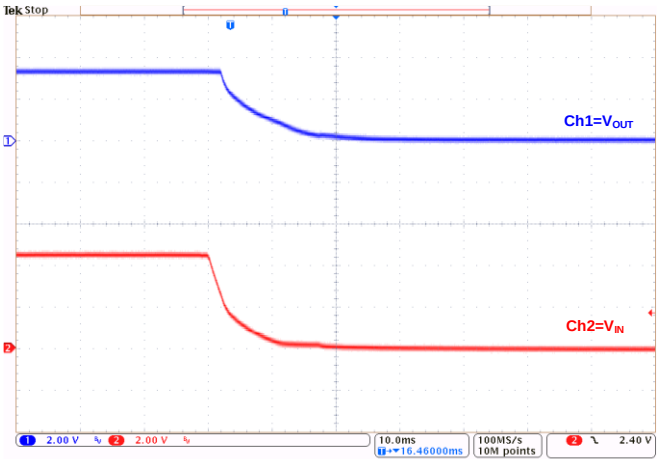

Power Down at V_{OUT}=3.3V:

(I_{OUT}=1mA)

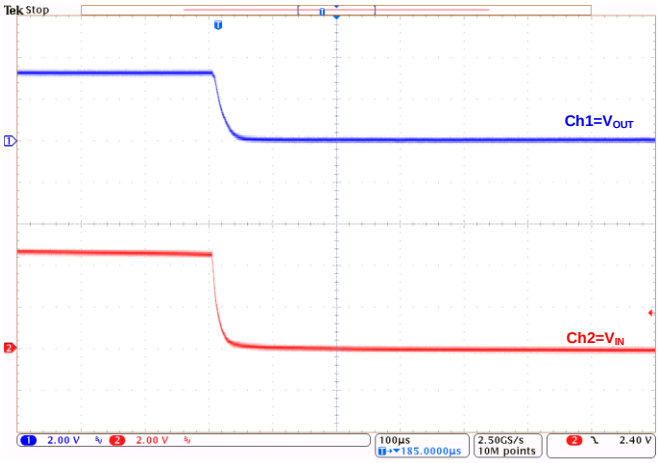

Power Down at V_{OUT}=3.3V:

(I_{OUT}=500mA)

■ Typical Performance Characteristics (Continued):

Test Conditions: V_{IN}=V_{OUT}+1.0V, C_{IN}=1.0μF, C_{OUT}=1.0μF, T_a=25℃, unless otherwise indicated.

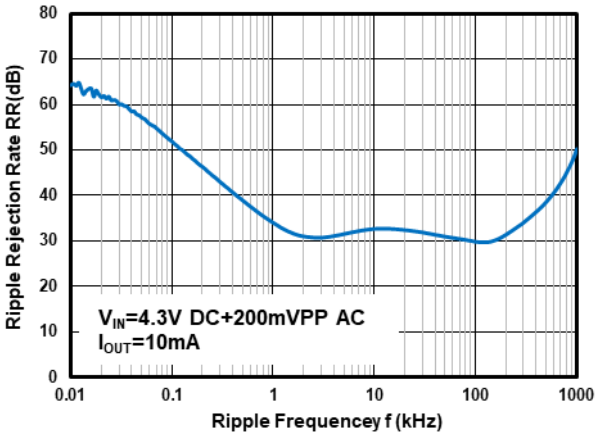

Power Supply Rejection Ratio at V_{OUT}=3.3V

■ Operational Explanation:

1. Output voltage control

The voltage divided by resistors R1 and R2 is compared with the internal reference voltage by the error amplifier. The amplifier output then drives the P-channel MOSFET connected to the V_{OUT} pin. The output voltage at the V_{OUT} pin is regulated by this negative feedback system. The current limit circuit and short protect circuit operate in relation to output current level. Further, the IC's internal circuitry can be in operation or shutdown modes controlled by the EN pin's signal.

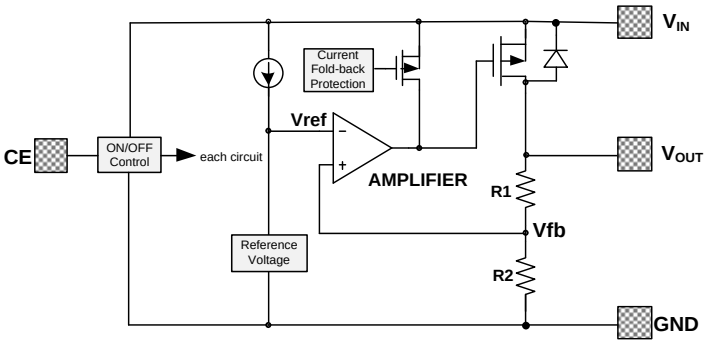

2. Pass transistor

The pass transistor with low turn-on resistance used in MD52XX is a P-channel MOSFET. If the potential on V_{OUT} pin is higher than VIN, it is possible that IC will be destroyed due to reverse current which is caused by parasitic diodes between V_{IN} and V_{OUT}. Therefore, the V_{OUT} pin potential exceeds V_{IN}+0.3V is not allowed.

3. Current foldback and short circuit protection

The MD52XX series includes a combination of a fixed current limiter circuit and a foldback circuit, which aid the operations of the current limiter and circuit protection. When the load current reaches the current limit level, the fixed current limiter circuit operates and output voltage drops. As a result of this drop in output voltage, the foldback circuit operates, output voltage drops further and output current decreases. The short circuit current is about 65mA (typical value). This design can prevent the chip be damaged due to over temperature, moreover, the heat dissipation is limited by the package type.

Special attention should be paid to that the product of the dropout voltage on the chip and the output current must be smaller than the heat dissipation.

4. C_{OUT} Auto-Discharge Function

The MD52XX series can quickly discharge the electric charge at the output capacitor (C_{OUT}), when a low signal is set to the EN pin, which puts the whole IC into OFF state. The discharge function is achieved by an internal switch located between the V_{OUT} pin and the GND pin. In this state, the application is protected from a glitch operation caused by the electric charge at the output capacitor (C_{OUT}).

Moreover, discharge time of the output capacitor (C_{OUT}) is set by the C_{OUT} auto-discharge resistance (R_{DCHG}) and the output capacitor (C_{OUT}). By setting time constant of a C_{OUT} auto-discharge resistance value (R_{DCHG}) and an output capacitor value (C_{OUT}) as τ(τ= C_{OUT} x R_{DCHG}), the output voltage after discharge via the internal switch is calculated by the following formulas.

$V = V_{OUT(S)} \times e^{-t/\tau}$ or $t=\tau \ln(V_{OUT(S)} / V)$

V: Output voltage after discharge
$V_{OUT(S)}$: Output voltage

t: Discharge time

τ: C_{OUT} x R_{DCHG}

Please also note R_{DCHG} is depended on V_{IN} and When V_{IN} is high, R_{DCHG} is low.

■ Notes:

1. The input and output capacitors should be placed as close as possible to the IC.
2. If the impedance of the power supply is high, which is caused by forgetting installing input capacitor or installing too small value capacitor, the oscillation may occur.
3. Pay attention to the operation conditions of input and output voltage and load current, such that the power consumption in the IC should not exceed the allowable power consumption of the package even though the chip has short circuit protection.
4. IC has a built-in anti-static protection (ESD) circuit, but please do not add excessive stress to the IC.

■ Packaging Information:

DFN(1*1)-4L PACKAGE OUTLINE DIMENSIONS

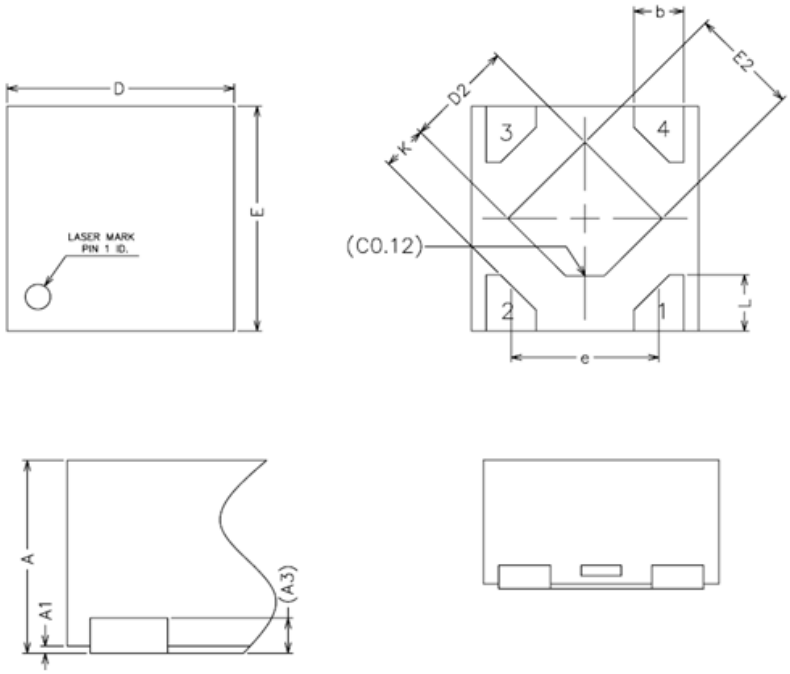

COMMON DIMENSIONS
(UNITS OF MEASURE=MILLIMETER)

SYMBOL	MIN	NOM	MAX
A	0.50	0.55	0.60
A1	0.00	0.02	0.05
A3		0.100REF	
b	0.17	0.22	0.27
D	0.95	1.00	1.05
E	0.95	1.00	1.05
D2	0.43	0.48	0.53
E2	0.43	0.48	0.53
L	0.20	0.25	0.30
e	0.60	0.65	0.70
K	0.15	–	–

■ PACKAGING INFORMATION(Continued):

SOT-89-3L PACKAGE OUTLINE DIMENSIONS

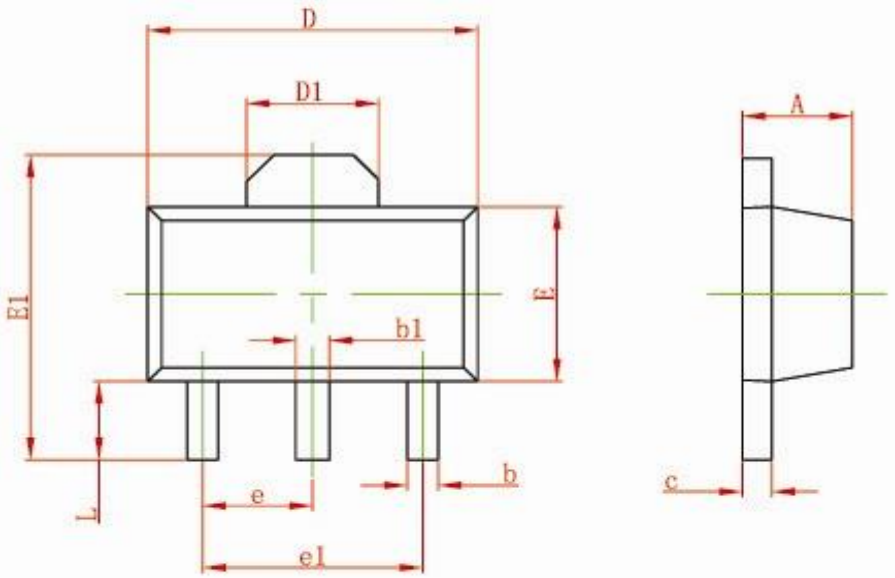

Symbol	Dimensions In Millimeters		Dimensions In Inches	
	Min	Max	Min	Max
A	1.400	1.600	0.055	0.063
b	0.320	0.520	0.013	0.197
b1	0.400	0.580	0.016	0.023
c	0.350	0.440	0.014	0.017
D	4.400	4.600	0.173	0.181
D1	1.550 REF		0.061 REF	
E	2.300	2.600	0.091	0.102
E1	3.940	4.250	0.155	0.167
e	1.500 TYP		0.060TYP	
e1	3.000 TYP		0.118TYP	
L	0.900	1.200	0.035	0.047

■ PACKAGING INFORMATION(Continued):

SOT-23-5L PACKAGE OUTLINE DIMENSIONS

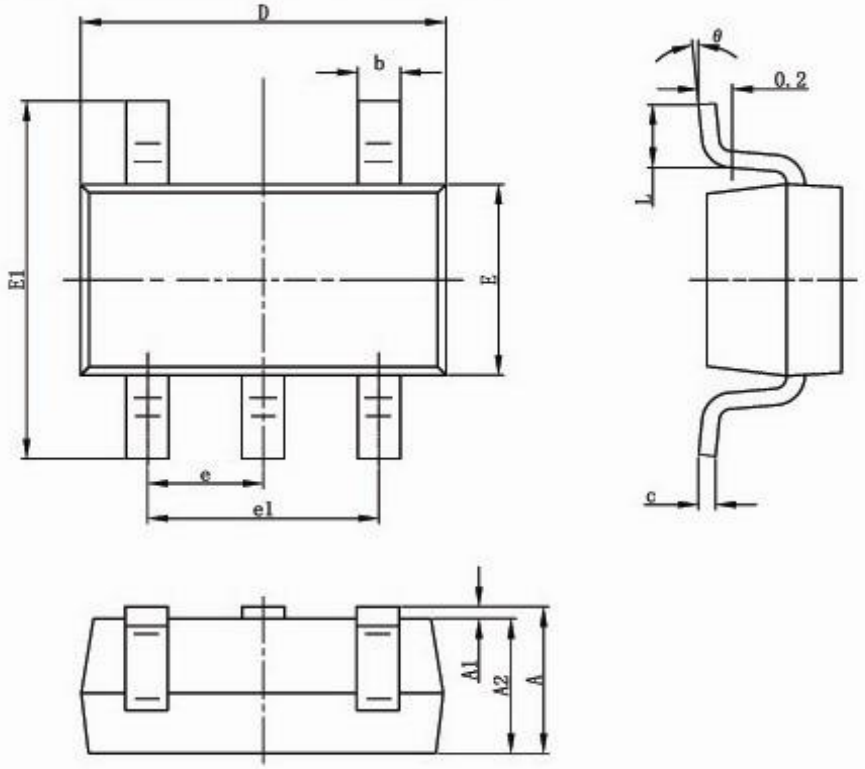

Symbol	Dimensions In Millimeters		Dimensions In Inches	
	Min	Max	Min	Max
A	1.050	1.250	0.041	0.049
A1	0.000	0.100	0.000	0.004
A2	1.050	1.150	0.041	0.045
b	0.300	0.500	0.012	0.020
c	0.100	0.200	0.004	0.008
D	2.820	3.020	0.111	0.119
E	1.500	1.700	0.059	0.067
E1	2.650	2.950	0.104	0.116
e	0.950(BSC)		0.037(BSC)	
e1	1.800	2.000	0.071	0.079
L	0.300	0.600	0.012	0.024
θ	0°	8°	0°	8°

■ PACKAGING INFORMATION(Continued):

SOT-23-3L PACKAGE OUTLINE DIMENSIONS

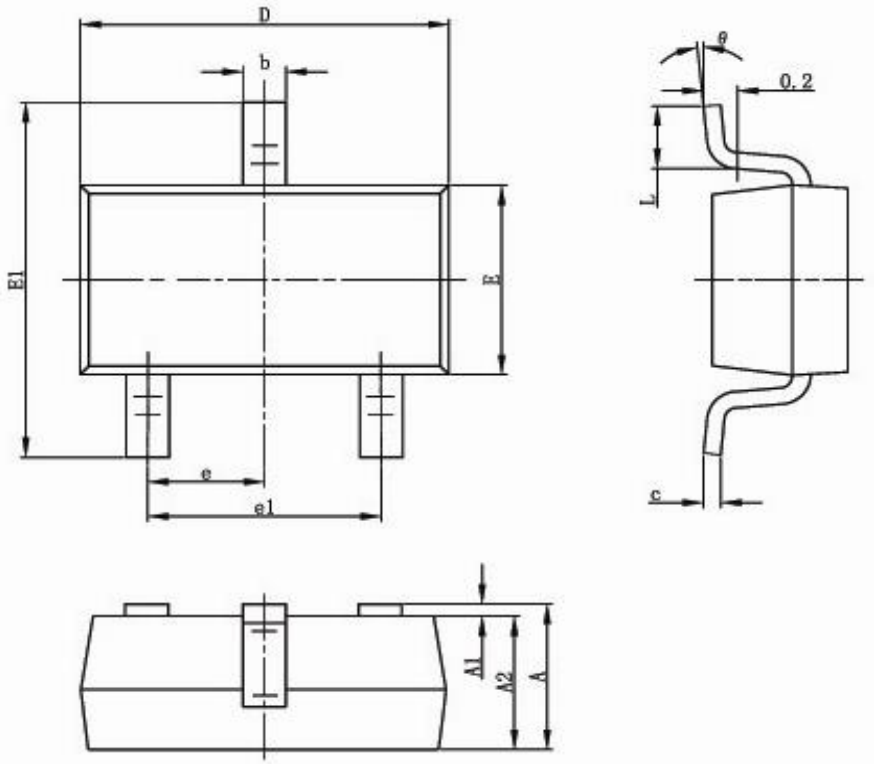

Symbol	Dimensions In Millimeters		Dimensions In Inches	
	Min	Max	Min	Max
A	1.050	1.250	0.041	0.049
A1	0.000	0.100	0.000	0.004
A2	1.050	1.150	0.041	0.045
b	0.300	0.500	0.012	0.020
c	0.100	0.200	0.004	0.008
D	2.820	3.020	0.111	0.119
E	1.500	1.700	0.059	0.067
E1	2.650	2.950	0.104	0.116
e	0.950(BSC)		0.037(BSC)	
e1	1.800	2.000	0.071	0.079
L	0.300	0.600	0.012	0.024
θ	0°	8°	0°	8°