REV.	ECN NO.	REVISED	DATE

RoHs 环保

A型

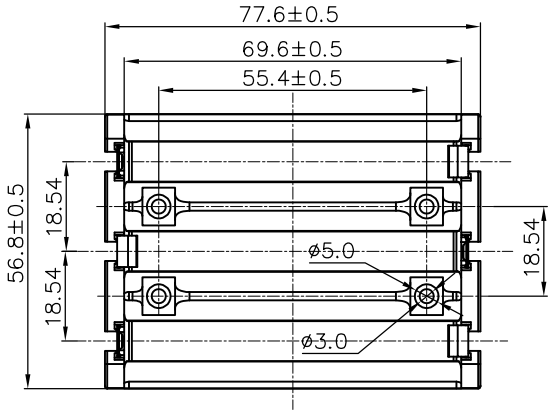

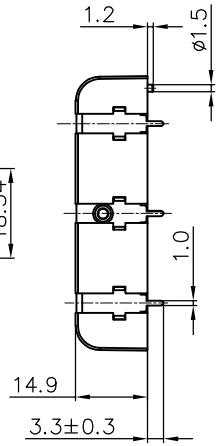

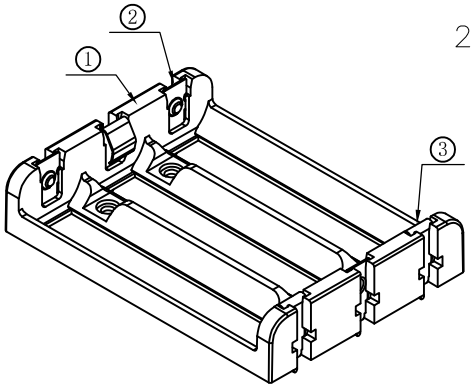

NOTE:
1.MATERIAL:
a.HOUSING: PA46 UL94 V-0 BLACK
b.CONTACTS: SUS304 T=0.35MM Ni-PLATING
2.ELECTRIC:
a.DIELECTNIC VOLTAGE: 500V AC ONE MINUTE
b.OPERATING TEMPERATURE: -25°C~ +85°C

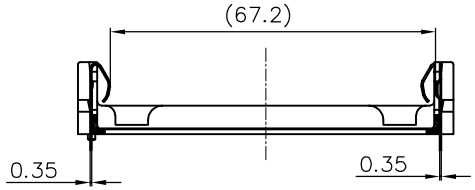

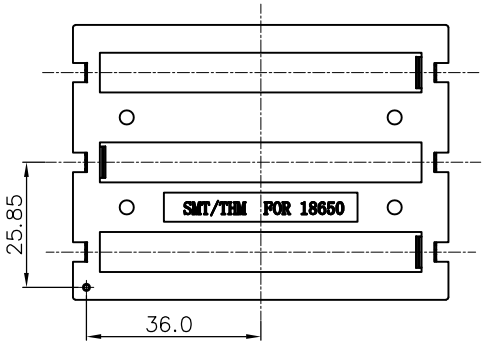

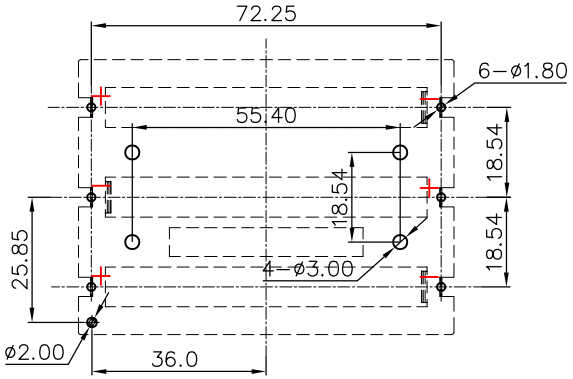

PCB Layout Diagram
Bottom View

ORDERING INFORMATION

BH-18650-A6AJ042

- 电池盒 — BH
- 电池型号 — 18650
- DIP 90° TYPE — A
- MATERIAL: 6A-PA46 BLACK — 6A
- PLATING: J-Ni-PLATING — J

工程部
2025-12-31
LQ. HUANG

NO.	PART NAME	Q'TY	MATERIAL	PLATING & COLOR
3	TERMINAL-	3	SUS304 T=0.35mm	Ni-Plating
2	TERMINAL+	3	SUS304 T=0.35mm	Ni-Plating
1	HOUSING	1	PA46 UL94 V-0	BLACK

UNLESS OTHERWISE SPECIFIED TOLERANCES

DECIMALS: X :±0.30, X.X :±0.25, X.XX :±0.20, X.XXX :±0.10
ANGLES: X :±3°

A-PD

SHEET 1 OF 1

MYOUNG 美阳 www.meiyangdz.com

DSND	Huanglieqing	DATE	2025-12-31
CHKD	Linanzuo	DATE	2025-12-31
APVD	XueShunyong	DATE	2025-12-31
SCALE: 1:1	SIZE: A4	VIEW:	
UNIT: mm	REV.: A/0	OBJECT: MY	

TITLE: 电池盒BH-18650-3J Ni DIP PA46串联

PART NO.: BH-18650-A6AJ042

DRAW NO.:MY-CP-0507