AOTE SEMICONDUCTOR

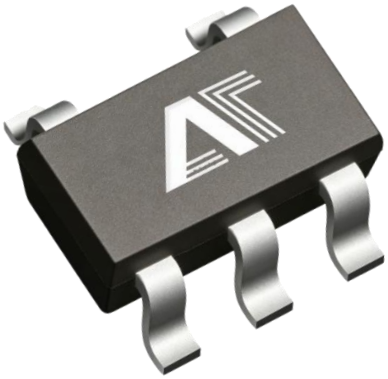

Single channel buffer gate

SN74LVC1G34

Product Data Sheet

AOTE DCC
RELEASE

Summary ：

SN74LVC1G34 is a single channel buffer gate that can operate within a supply voltage range of 1.65V to 5.5V.

The SN74LVC1G34 device executes the Boolean function Y=A

This CMOS device has high output driving function while maintaining low static power consumption over a wide range of VCC operation.

The device is packaged in SOT23-5 and SC70-5 The working temperature range is from-40°to125°C.

Product features

- Small Package: SOT23-5、SC70-5
- Working voltage range: 2.0V~5.5V
- Low power consumption: 0.1μA (typical value)
- Working temperature range: -40°C~+125°C
- Input voltage up to 5.5V
- High Output driver: When powered by3.0V,output driver±24mA
- I_{off} supports partial power-off mode operation;

Applications

- Communication receiver
- Blu ray player and home theater
- Desktop or laptop computer
- Digital Video Camera (DVC)
- mobile phone
- Personal Navigation Device (GPS)
- Portable media player

Packaging and Order Description

Product Name	Order Model	Temperature Range (℃)	boxed type	screen printing	MSL(3)	Packing Specification
SN74LVC1G34	SN74LVC1G34DCKR	-40℃ ~+125℃	SC70-5	C95	MSL3	Tape and Reel, 3000
	SN74LVC1G34DBVR	-40℃ ~+125℃	SOT23-5	C34J	MSL3	Tape and Reel, 3000

Attention:

(1) This information is the latest data for the current version. If these data are updated, they will be promptly updated on our official website without further notice.

(2) Silk screen printing may have additional codes for internal control traceability of products (including data codes and supplier codes) or marking the place of origin.

(3) MSL， Humidity sensitivity level classified according to JEDEC industry standards.

(4) equivalent SOT353

 AOTE All Rights Reserved. Release Date :April 7, 2026

Logic diagram

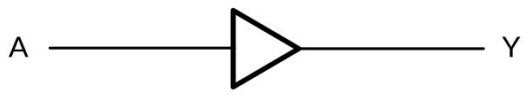

Y=A
H=high level
L=high level

Menu

Input	Output
A	**Y**
H	H
L	L

On-product information:

- **Footage image**

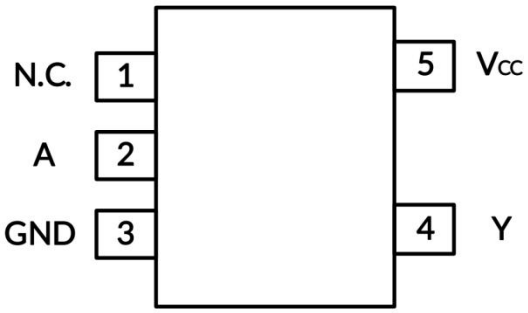

SOT23-5/SC70-5

Pin	Pin Name	I/O	Function Description
1	N.C.	-	No connection
2	A	I	A input
3	GND	P	grounding
4	Y	O	Y output
5	Vcc	P	power supply

AOTE All Rights Reserved. Release Date :April 7, 2026

◆ Absolute maximum rating Within the natural ventilation temperature range (unless otherwise specified)

	Parameter		Min	Max	Unit
VCC	Power supply voltage range		-0.5	6.5	V
VI	Input voltage range		-0.5	6.5	V
Vo	The voltage range applicable to any output under high impedance or power-off conditions		-0.5	6.5	V
Vo	The voltage range applicable to any output in either high or low level state		-0.5	VCC+0.5	V
IIK	Input clamp current V_I <0		-	-50	mA
IOK	Output clamp current V_O <0		-	-50	mA
IO	Continuous output current		-	±50	mA
	Continuous current through VCC or GND		-	±100	mA
• current parameters					
θ JA	Thermal resistance to the environment	SOT23-5	-	230	°C/W
		SC70-5	-	380	
• current parameters					
temperature parameter	Junction temperature, TJ		-65	150	°C
	Storage temperature range, Tstg		-65	150	

◆ ESD level

The following ESD information is only applicable to sensitive equipment operated within an ti-static protection zones

_	nominal value	Unit
human model (HBM)	±4000	V
Charged Device Model (CDM)	±1500	
Mechanical Model (MM)	±200	

ESD sensitivity warning

The scope of ESD damage can range from minor performance degradation to complete equipment failure. Precision integrated circuits may be more susceptible to damage as very small parameter changes can result in devices not meeting their published parameter specifications.

Attention:

(1) This only represents the limit values obtained by the product under testing conditions, and does not mean that the product can work normally under these conditions or other parameter conditions beyond the specifications. Exceeding the range specified by the absolute maximum rated value above will cause damage to the product, and it is impossible to predict the working state of the product outside of the above conditions. If the product operates under conditions other than those mentioned above for a long time, it may affect its performance.

(2) If the input and output current ratings are followed, it may exceed the input and output negative voltage ratings.

(3) The value of VCC is provided in the recommended working condition table.

(4) The thermal impedance of the package is calculated according to JESD-51 standard:

(5) The maximum power consumption is a function of $T_{J(MAX)}$, RθJA, and T_A. The maximum power consumption at any ambient temperature is $Po=(T_{J(MAX)} - T_A)/R\theta JA$, which is suitable for packaging directly soldered to PCB.

AOTE All Rights Reserved. Release Date :April 7, 2026

◆ Electrical Characteristics

(Within the natural ventilation temperature range (typical test conditions are: TA=+25 ° C, full temperature=-40 ° C~125 ° C)

◆ Recommended working conditions

Parameter	symbol	Test conditions	Min	Max	Unit
power supply voltage	Vcc	work	1.65	5.5	V
		Only retain data	1.5	5.5	
High level input voltage	V_{IH}	VCC =1.65V - 1.95V	0.65 x Vcc	-	V
		VCC=2.3V - 2.7V	1.7		
		VCC=3V - 3.6V	2.2		
		VCC=4.5V - 5.5V	0.7 x Vcc		
Low level input voltage	V_{IL}	VCC =1.65V - 1.95V	-	0.3 x Vcc	V
		VCC=2.3V- 2.7V		0.7	
		VCC=3V - 3.6V		0.8	
		VCC=4.5V - 5.5V		0.3 x Vcc	
input voltage	V_I	-	0	5.5	V
output voltage	V_O	-	0	Vcc	V
Input conversion up or down rate	t_r, t_f	V_{CC} =1.8±0.15V,2.5V±0.2V	-	20	ns/V
		VCC=3.3V ±0.3V		10	
		VCC=5V ±0.5V		5	
Working temperature range under natural ventilation conditions	T_A	-	-40	125	°C

All unused input ports of the device must be kept at VCC or GND to ensure proper operation of the device

AOTE All Rights Reserved. Release Date :April 7, 2026

DC characteristics

Parameter	Test conditions	Vcc	temperature	Min	Typ	Max	Unit
V_{OH}	I_{OH} = -100μA	1.65V-5.5V	Full temperature	VCC-0.1	-	-	V
	I_{OH} = -4mA	1.65V		1.2			
	I_{OH} = -8mA	2.3V		1.9			
	I_{OH} = -16mA	3V		2.4			
	I_{OH} = -24mA			2.3			
	I_{OH} = -32mA	4.5V		3.8			
V_{OL}	I_{OH} = 100μA	1.65V-5.5V	Full temperature	-	-	0.1	V
	I_{OH} = 4mA	1.65V		-	-	0.45	
	I_{OH} = 8mA	2.3V		-	-	0.3	
	I_{OH} = 16mA	3V		-	-	0.4	
	I_{OH} = 24mA			-	-	0.55	
	I_{OH} = 32mA	4.5V		-	-	0.55	
I_I A input	V_I =5.5V orGND	0V - 5.5V	+25°C Full temperature	-	±0.1	±5	μA
I_{off}	V_I or V_O=5.5V	0V	+25°C Full temperature	-	±0.1	±10	μA
I_{CC}	V_I =5.5V or GND, I_O=0	1.65V - 5.5V	+25°C Full temperature	-	0.1	10	μA
ΔI_{CC}	One input at Vcc-0.6V, Other inputs at VCC or GND	3V - 5.5V	Full temperature			500	μA
Ci Input capacitance	V_I=Vcc or GND;	3.5V	+25°C	-	4	-	pF

(1) All unused input ports of the device must be kept at VCC or GND to ensure proper operation of the device.
(2) The limit value is 100% production testing conducted at 25°C. Ensure the limitation of the working temperature range by utilizing the correlation of statistical quality control (SQC) methods.
(3) Typical values represent the most likely parameter specifications determined during characterization. The actual typical values may vary over time and will also depend on the application and configuration.

AC characteristics

Parameter	symbol	Test conditions		°C	Min	Typ	Max
propagation delay	t_{pd}	V_{CC} =1.8V±0.15V V_{CC} =2.5V±0.2V V_{CC} =3.3V±0.3V V_{CC} =5V±0.5V	C_L=30pF, R_L=1kΩ C_L=30pF, R_L=500Ω C_L=50pF, R_L=500Ω C_L=50pF, R_L=500Ω	-	13.2 5.2 4.0 3.5	-	ns
Powerconsumption capacitor	C_{pd}	V_{CC} =1.8V V_{CC} =2.5V V_{CC} =3.3V V_{CC} =5V	f=10MHz	-	16 18 18 20	-	pF

(1) All unused input ports of the device must be kept at VCC or GND to ensure proper operation of the device.
(2) This parameter is ensured by design and/or characteristics and has not been tested in production.
(3) Typical values represent the most likely parameter specifications determined during characterization. The actual typical values may vary over time and will also depend on the application and configuration.

AOTE All Rights Reserved. Release Date :April 7, 2026

◆ Parameter measurement information

open-drain output

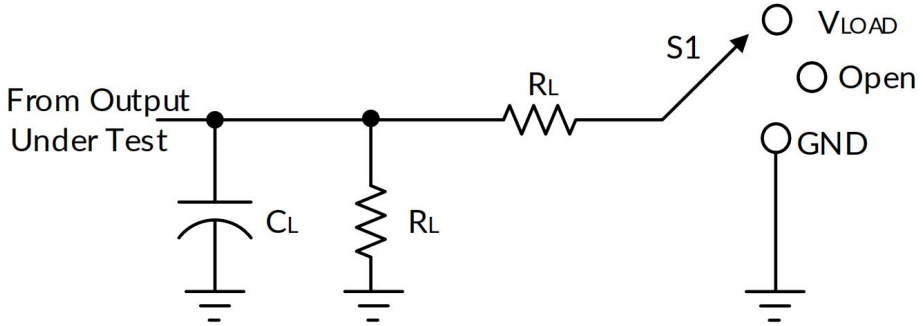

TEST	S1
t_{PLH}/t_{PHL}	Open
t_{PLZ}/t_{PZL}	V_{LOAD}
t_{PHZ}/t_{PZH}	GND

VCC	INPUTS		VM	VLOAD	CL	RL	VΔ
	V_I	t_r/t_f					
1.8V±0.15V	V_{CC}	≤2ns	$V_{CC}/2$	2 x V_{CC}	30pF	1KΩ	0.15V
2.5V±0.2V	V_{CC}	≤2ns	$V_{CC}/2$	2 x V_{CC}	30pF	500Ω	0.15V
3.3V±0.3V	3V	≤2.5ns	1.5V	6V	50pF	500Ω	0.3V
5V±0.5V	V_{CC}	≤2.5ns	$V_{CC}/2$	2 x V_{CC}	50pF	500Ω	0.3V

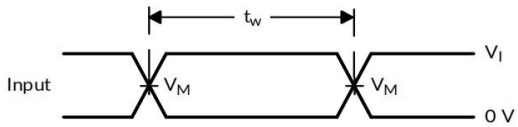

VOLTAGE WAVEFORMS
PULSE DURATION

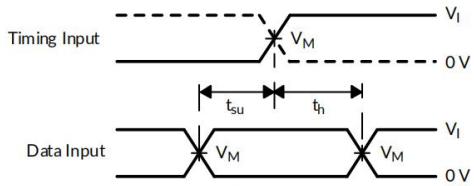

VOLTAGE WAVEFORMS
SETUP AND HOLD TIMES

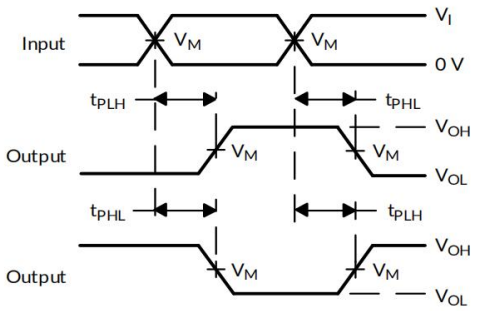

VOLTAGE WAVEFORMS PROPAGATION DELAY
TIMES INVERTION AND NONINVERTING OUTPUTS

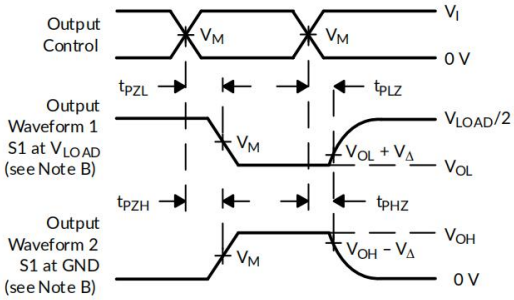

VOLTAGE WAVEFORMS ENABLE AND DISABLE TIMES
LOW-AND HIGH-LEVEL ENABLING

Note: A.CL includes probe and fixture capacitors.
B. Waveform 1 is used for outputs with internal conditions, where the output is low unless disabled by the output controller. Waveform 2 is used for outputs with internal conditions, where the output is high unless disabled by the output controller.
C. All input pulses are provided by a generator with the following characteristics: PRR≤10MHz, Zo=50Ω
D. Output one measurement at a time, with a transition for each measurement.
E. T_{PLZ} and t_{PHZ} are the same as t_{dis}.
F. T_{PZL} and t_{PZH} are the same as t_{en}.
G. T_{PLH} and t_{PHL} are the same as t_{pd}.
H.Not all parameters and waveforms are applicable to all devices.

AOTE All Rights Reserved. Release Date :April 7, 2026

◆ Detailed description

Overview:

The SN74LVC1G34 device includes a buffer gate and executes the Boolean function Y=A. This device can be used for Ioff power-off applications. When the device is powered off, the Ioff circuit will disable the output to prevent backflow current from damaging the device.

Functional Block Diagram

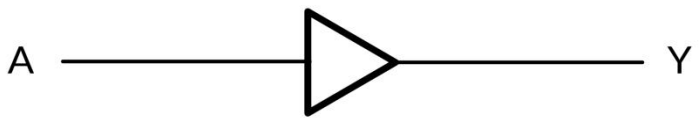

Feature Description

- Wide working voltage range
  The working voltage range is 1.65V to 5.5V
- Allow voltage reduction conversion
- Input voltage up to 5.5V
- The Ioff function allows voltage to be provided on the input and output when VCC is OV

Application and Design

Application Information:

SN74LVC1G34 is a high drive CMOS device that can be used as a buffer with high output drive, such as in LED applications. It can generate a driving current of 24mA at a voltage of 3.0V, making it ideal for driving multiple outputs and suitable for high-speed applications up to 100MHz. Input voltage as high as 5.5V, allowing conversion as low as VCC.

Design requirements:

This device adopts CMOS technology and has balanced output drive. Attention should be paid to avoiding bus contention as it may drive currents exceeding the maximum limit. High drive can also generate fast edges in light loads, so wiring and load conditions should be considered to prevent ringing.

Power recommendations

The power pins should be equipped with good bypass capacitors to prevent power interference. For devices powered by a single power source, it is recommended to use a 0.1F capacitor; For devices with multiple VCC pins, it is recommended to use capacitors with 0.01 μ F or 0.022 μ F for each power pin. Multiple bypass capacitors can be connected in parallel to suppress noise of different frequencies. Usually, capacitors with 0.1 μ F and 1 μ F are used in parallel. The bypass capacitor should be installed as close as possible to the power supply pin.

AOTE All Rights Reserved. Release Date :April 7, 2026

◆ PCB layout design

Precautions for PCB layout design:

When using multi bit logic devices, the input pins should not be suspended. In practical applications, some functions of digital logic devices are often idle, such as using only two inputs from the three input gate or enabling only three gates from the four buffer gate. These unused input pins should not be left hanging, as undefined external connection point voltage will cause abnormal device operation. The following specifies the rules that must be followed in all situations. All idle input pins must be connected to a high or low bias to eliminate the risk of floating. The specific logic level that needs to be applied to the idle pin depends on the device's functional characteristics. The conventional approach is to connect it to GND or VCC, depending on the actual convenience.

PCB layout diagram:

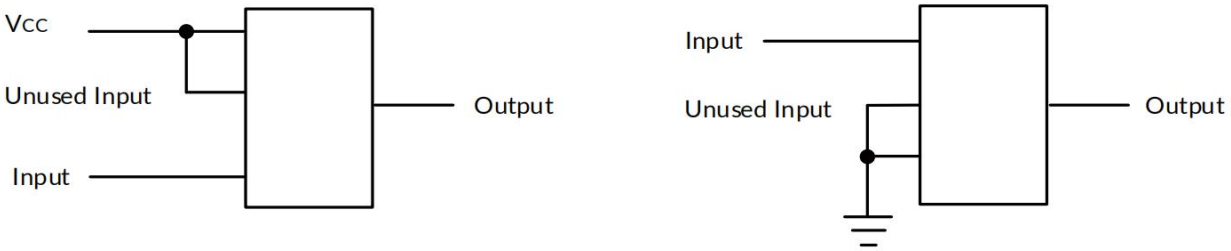

Figure 2. PCB layout diagram

AOTE All Rights Reserved. Release Date :April 7, 2026

◆ Packaging specifications size

REEL DIMENSIONS

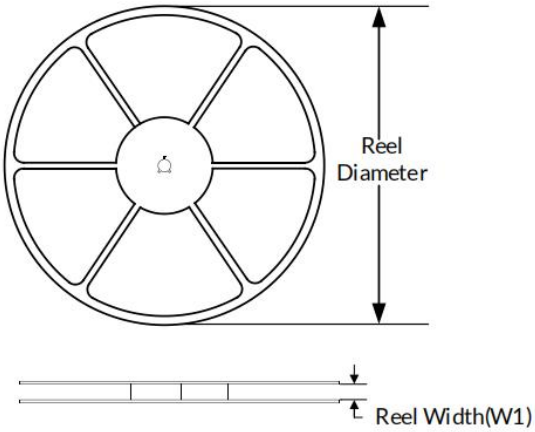

TAPE DIMENSION

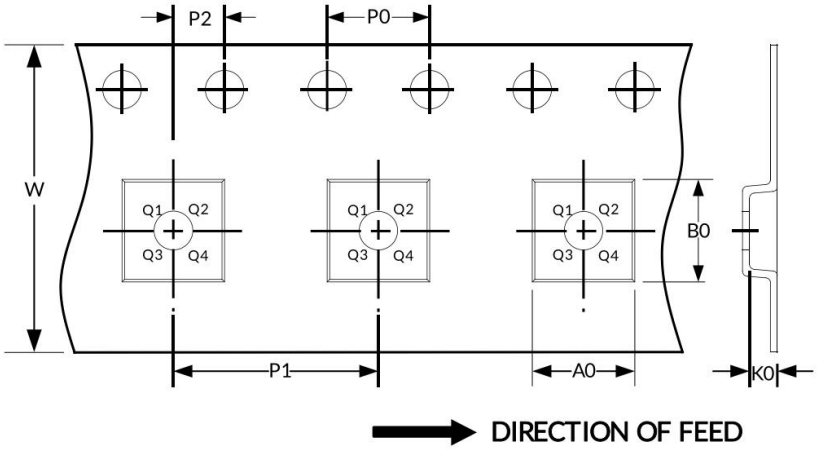

Attention: The pictures are for reference only. Please use the physical object as the standard

◆ Key parameter table

Package Type	Reel Diameter	Reel Width (mm)	A0 (mm)	B0 (mm)	K0 (mm)	P0 (mm)	P1 (mm)	P2 (mm)	W (mm)	Pin1 Quadrant
SC70-5	7″	9.5	2.25	2.55	1.20	4.0	4.0	2.0	8.0	Q3
SOT23-5	7″	9.5	3.20	3.20	1.40	4.0	4.0	2.0	8.0	Q3

Attention:
All dimensions are nominal sizes.
Excluding plastic wrap or metal protrusions with a maximum of 0.15 millimeters on each side.

AOTE All Rights Reserved. Release Date :April 7, 2026

◆ Packaging specifications and dimensions

Attention:

1、Excluding plastic wrap or metal protrusions with a maximum of 0.15mm on each side.
2、BSC (Basic Center Spacing), where the "basic" spacing is the nominal spacing.
3、This image is subject to change without prior notice

SOT23-5

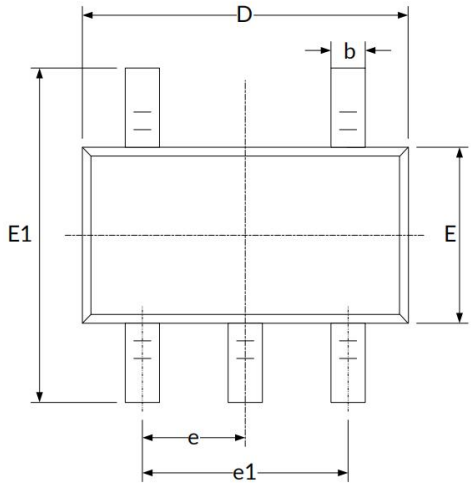

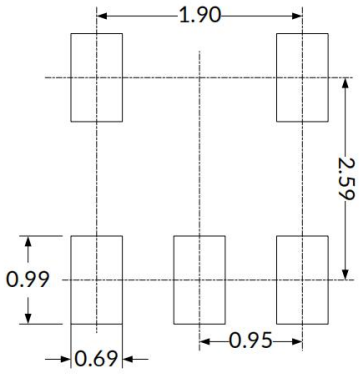

RECOMMENDED LAND PATTERN (Unit: mm)

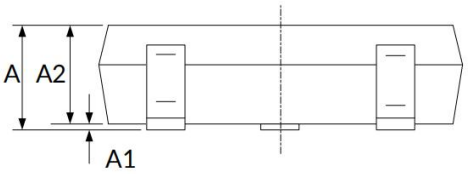

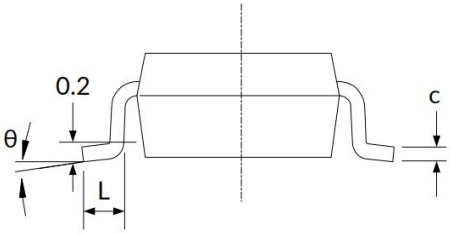

symbol	Dimensions (in millimeters)		Dimensions (in inches)	
	Min	Max	Min	Max
A	1.050	1.250	0.041	0.049
A1	0.000	0.100	0.000	0.004
A2	1.050	1.150	0.041	0.045
b	0.300	0.500	0.012	0.020
C	0.100	0.200	0.004	0.008
D	2.820	3.020	0.111	0.119
E	1.500	1.700	0.059	0.067
E1	2.650	2.950	0.104	0.116
e	0.950 (BSC)		0.037 (BSC)	
e1	1.800	2.000	0.071	0.079
L	0.300	0.600	0.012	0.024
θ	0°	8°	0°	8°

AOTE All Rights Reserved. Release Date :April 7, 2026

◆ Packaging specifications and dimensions

Attention:

1、Excluding plastic wrap or metal protrusions with a maximum of 0.15mm on each side.
2、BSC (Basic Center Spacing), where the "basic" spacing is the nominal spacing.
3、This image is subject to change without prior notice

SC70-5

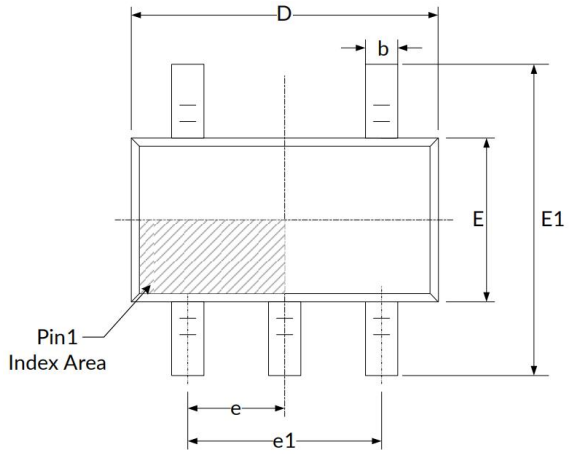

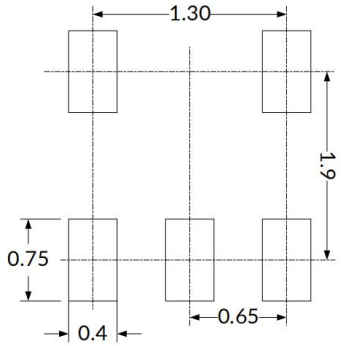

RECOMMENDED LAND PATTERN (Unit: mm)

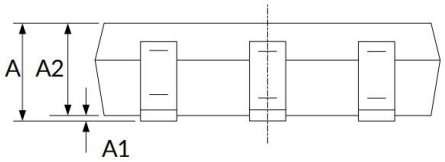

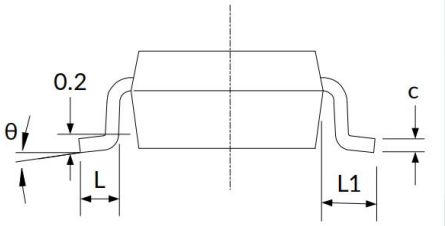

symbol	Dimensions (in millimeters)		Dimensions (in inches)	
	Min	Max	Min	Max
A	0.900	1.100	0.035	0.043
A1	0.000	0.100	0.000	0.004
A2	0.900	1.000	0.035	0.039
b	0.150	0.350	0.006	0.014
c	0.080	0.150	0.003	0.006
D	2.000	2.200	0.079	0.087
E	1.150	1.350	0.045	0.053
E1	2.150	2.450	0.085	0.096
e	0.650 (BSC)		0.026(BSC)	
el	1.300 (BSC)		0.051(BSC)	
L	0.260	0.460	0.010	0.018
L1	0.525		0.021	
θ	0°	8°	0°	8°

AOTE All Rights Reserved. Release Date :April 7, 2026

◆ Attention

- AOTE implements dynamic technical updates. Specifications are subject to change. Refer to the official website for the latest version.
- Users must strictly adhere to specified conditions. Failures caused by misuse (overload, high temperature, incompatible circuits) are excluded from warranty.
- Contact technical support for customized validation in critical applications (medical devices, industrial control).
- This document is valid until December 31, 2026 Updates will be notified on the official website.
- For further clarification on technical specifications or application solutions, please contact us through official channels:

AOTE All Rights Reserved. Release Date :April 7, 2026