NSH803PQ 8A, 300V Half-Bridge IPM

1. Features

- Under-voltage lockout for both channels
- High-level effective, supported 3.3V, 5V and 15V input
- Integrated gate drivers and bootstrap functionality
- Temperature detected output for MCU control
- Cross-conduction prevention logic
- Isolation 1500 VRMS min
- 300V maximum operating voltage
- 8A Peak pulse current @25℃
- Maximum Power Dissipation 14W
- High-Side Under-Voltage Protection
  --Trigger level=8.2V
  --Reset level= 8.9V

2. Applications

- BLDC Motor control
- BDC Motor control

3. Description

NSH803PQ is a 8A,300V half-bridge intelligence power module designed for motor drive applications, integrated 8A/300V MOSFET gate driver and bootstrap functionality in a small PQFN 5×6mm package. It can be flexibly applied to single-phase and three-phase DC brushless motor drive.

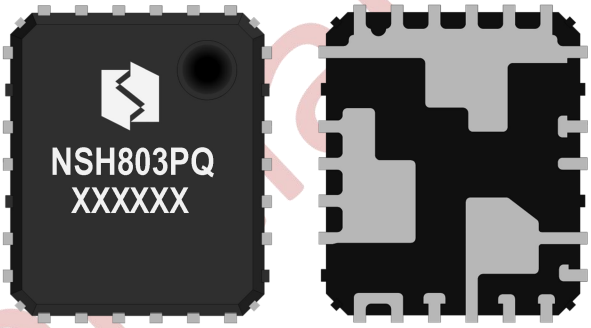

Device Information

Part Number	Package	Body size
NSH803PQ	PQFN5x6	5mm x 6mm

Internal Electrical Schematic

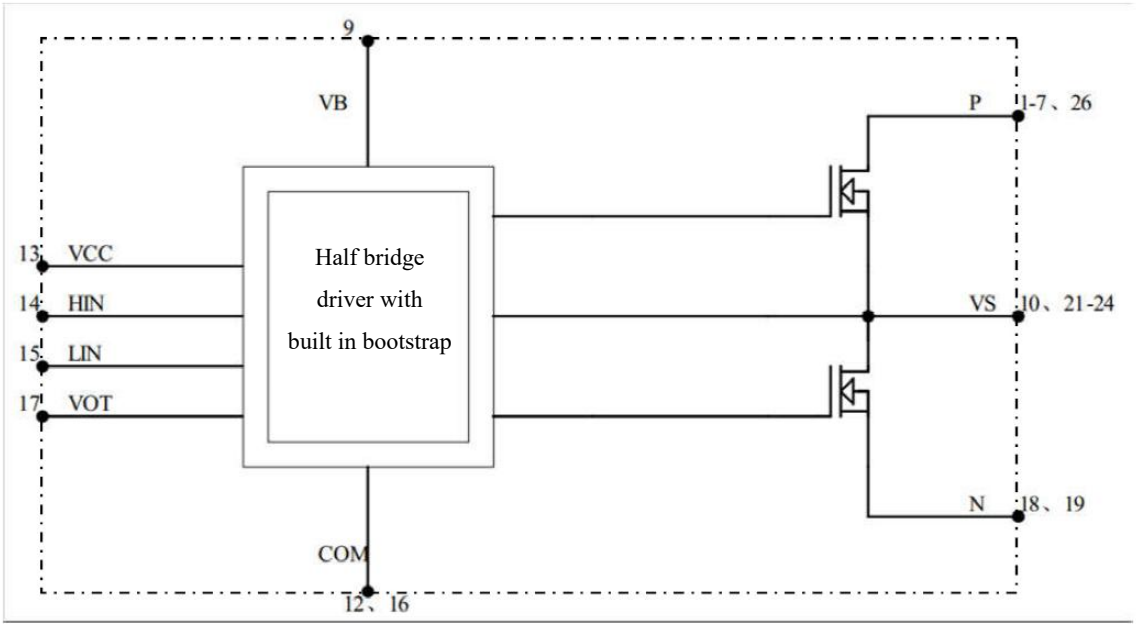

Fig.1 Internal Electrical Schematic

4. Selection Guide

PART No.	Input signal	Deadtime	UVLO	Built in BSD	BV_{DSS}	Pulse Current
NSH803PQ	HIN, LIN	540ns	8.2/8.9V	YES	300V	8A

5. Order Information

PART No.	Marking	Package Type	packing of products	SPQ
NSH803PQ	NSH803PQ XXXXXX	**PQFN5x6**	Tape and reel	6 K

6. Revision History

Version	Items	Time
V1.0	Created	2023.8.15

Confidential

目录

1. FEATURES 1
2. APPLICATIONS 1
3. DESCRIPTION 1
4. SELECTION GUIDE 2
5. ORDER INFORMATION 2
6. REVISION HISTORY 2
7. PIN-OUT DESCRIPTION 4
8. ABSOLUTE MAXIMUM RATINGS 5
8.1 INVERTER PART 5
8.2 CONTROL PART 5
8.3 BOOTSTRAP FUNCTIONALITY 5
8.4 TOTAL SYSTEM 5
8.5 THERMAL AND MECHANICAL CHARACTERISTICS 5
9. RECOMMENDED OPERATING CONDITIONS 6
10. ELECTRICAL CHARACTERISTICS 7
10.1 CONVERT PART 7
10.2 CONTROL PART 7
11. FUNCTION DESCRIPTION 8
11.1 BASIC FUNCTION DESCRIPTION 8
11.2 TIME CHARTS OF PROTECTIVE FUNCTION 9
12. NSH803PQ TYPICAL APPLICATION CIRCUIT 10
13. DETAILED PACKAGE OUTLINE DRAWINGS 11

Confidential

7. Pin-Out Description

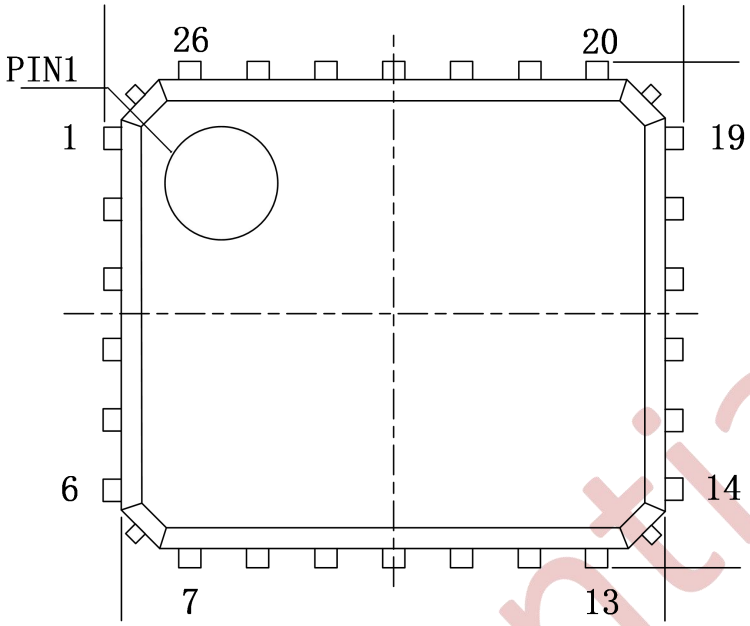

Fig2 Footprint Description

Table7-1 Pin description

PIN	Name	Description
13	VCC	Gate Drive Supply
14	HIN	Logic Input for High Side
15	LIN	Logic Input for Low Side
17	VOT	Temperature Signal Out
12、16	COM	Low Side Gate Drive Return
18,19	N	Low Side Source Connection
10、21-24	VS	Phase Output
1-7、26	P	DC Bus
9	VB	High Side Floating Supply (Bootstrap Cap Connection)

Confidential

8. Absolute Maximum Ratings

Tj= 25°C, Unless Otherwise Specified

8.1 Inverter Part

Symbol	Parameter	Conditions	Ratings	Unit
V_{DSS}	Drain-Source Voltage of Each MOSFET	T_C = 25°C	300	V
I_D	Each MOSFET Current, Continuous	T_C = 25°C（Tc refer to Fig:5）	4	A
		T_C=75°C	3	A
I_{DM}	Each MOSFET Pulse Current, Peak	T_C = 25°C, less than 100us	8	A
		T_C=75°C	6	A
I_{Drms}	Each MOSFET Current, Rms	T_C = 25°C, F_{PWM} <20KHz	2.8	Arms
P_D	Maximum Power Dissipation	T_C = 25°C， For Each MOSFET	14.0	W

8.2 Control Part

Symbol	Parameter	Conditions	Ratings	Unit
V_{CC}	Control Supply Voltage	Applied between V_{CC} and COM	20	V
V_{BS}	High-side Bias Voltage	Applied between VB and VS	20	V
V_{IN}	Input Signal Voltage	Applied between V_{IN} and COM	-0.3~V_{CC}+0.3	V

8.3 Bootstrap Functionality

Symbol	Description	Conditions	Rating	Unit
V_{RRMB}	Maximum Repetitive Reverse Voltage	Tc = 25°C	300	V
I_{FB}	Forward Current	Tc = 25°C	0.25	A
I_{FPB}	Forward Peak Current, Peak	Tc = 25°C，Less than 1mS	0.5	A

8.4 Total System

Symbol	Parameter	Conditions	Ratings	Unit
Tj	Operating Junction Temperature		-40~150	℃
TSTG	Storage Temperature	Tc = 25°C	-40~125	℃
VISO	Isolation Voltage	60Hz, Sinusoidal， AC 1 min， between pins and heat-sink plate	1500	Vrms

NOTE1：To insure safe operation of the IPM, the average junction temperature should be limited to TJ ≤ 150°C (@Tc ≤ 100°C).

8.5 Thermal and Mechanical Characteristics

Symbol	Parameter	Conditions	Ratings	Unit
Rth(J-B)	Thermal resistance, junction to mounting pad, each MOSFET	For Each MOSFET	1.8	°C/W
Rth(J-A)	Thermal resistance, junction to ambient, each MOSFET	For Each MOSFET	40	°C/W

Confidential

9. Recommended Operating Conditions

Symbol	Parameter	Conditions	Min.	Typ.	Max.	Unit
V_{PN}	Supply Voltage	Applied between P and N	-	150	200	V
V_{CC}	Control Supply Voltage	Applied between VCC and COM	10	12	16.5	V
V_{BS}	High-Side Bias Voltage	Applied between VB and VS	10	12	16.5	V
$V_{IN(ON)}$	Input ON Threshold Voltage	Applied between VIN and COM	3.0	-	V_{CC}	V
$V_{IN(OFF)}$	Input OFF Threshold Voltage		0	-	0.6	V
t_{dead}	Blanking Time for Preventing Arm-Shor	V_{CC} = V_{BS} = 13.5 ~ 16.5 V, Tj <150°C	1.0	-	-	μs
F_{PWM}	PWM Switching Frequency	Tj <150°C	-	15	-20	kHz

Confidential

10. Electrical Characteristics

TJ= 25°C, Unless Otherwise Specified

10.1 Convert Part

Symbol	Parameter	Conditions	Min.	Typ.	Max.	Unit
BV_{DSS}	Drain - Source Breakdown Voltage	V_{IN} = 0 V, I_D = 1 mA（NOTE 2）	300	-	-	V
I_{DSS}	Zero Gate Voltage Drain Current	V_{IN} = 0 V, V_{DS} = 500 V	-	-	1	mA
V_{SD}	Drain - Source Diode Forward Voltage	V_{CC} = V_{BS} = 15V, V_{IN} = 0 V, I_D =-0.5 A	-	0.9	-	V
$R_{DS(on)}$	Drain-Source Turn-On Resistance	V_{CC} = V_{BS} = 15 V, V_{IN} = 5 V, I_D =0.5 A	-	0.8	1.1	ohm
t_{ON}	Switching Times	V_{PN} = 300 V, V_{CC} = V_{BS} = 15 V, I_D = 0.5 A V_{IN} = 0/5 V, Inductive Load L = 3 mH （NOTE 3）	-	1120	-	ns
t_{OFF}			-	720	-	ns
t_{rr}			-	180	-	ns
E_{ON}			-	85	-	μJ
E_{OFF}			-	20	-	μJ
R_{BSOA}	Reverse Bias Safe Operating Area	V_{PN} = 400 V, V_{CC} = V_{BS} = 15 V, I_D = I_{DP}, V_{DS} = BV_{DSS},T = 150°C	Full Square			

NOTE 2：BV_{DSS} is the absolute maximum voltage rating between drain and source terminal of each FRFET inside IPM. VPN should be sufficiently less than this value considering the effect of the stray inductance so that VDS should not exceed BV_{DSS} in any case.

NOTE 3: t_{ON} and t_{OFF} include the propagation delay time of the internal drive IC. Listed values are measured at the laboratory test condition, and they can be different according to the field applications due to the effect of different printed circuit boards and wirings. Please see Fig 3 for the switching time definition.

10.2 Control Part

Symbol	Parameter	Conditions		Min.	Typ.	Max.	Unit
I_{QCC}	Quiescent VCC Supply Current	V_{CC} = 15V V_{IN} = 5V	Applied between VCC and COM	-	360	500	μA
I_{QB}	Quiescent VBS Supply Current	V_{DB} = 15V V_{IN} = 5V	Applied between VB -VS	-	70	210	μA
UV_{CCD}	Low-Side Under-Voltage Protection	VCC Under-Voltage Protection Detection Level		7.4	8.2	9.0	V
UV_{CCR}		VCC Under-Voltage Protection Reset Level		8.0	8.9	9.8	V
UV_{BSD}	High-Side Under-Voltage Protection	VBS Under-Voltage Protection Detection Level		7.4	8.2	9.0	V
UV_{BSR}		VBS Under-Voltage Protection Reset Level		8.0	8.9	9.8	V
V_{TS}	HVIC Temperature Sensing Voltage Output	V_{CC} = 15 V, T_{HVIC} = 25°C (Fig:4)		0.6	0.75	0.90	V
V_{IH}	ON Threshold Voltage	Logic HIGH Level, Applied between VIN and COM		2.5	-		V
V_{IL}	OFF Threshold Voltage	Logic Low Level, Applied between VIN and COM			-	0.8	V
DT	Deadtime	Tc = 25°C ,VCC=15V		400	540	680	ns

Confidential

11. Function Description

11.1 Basic Function description

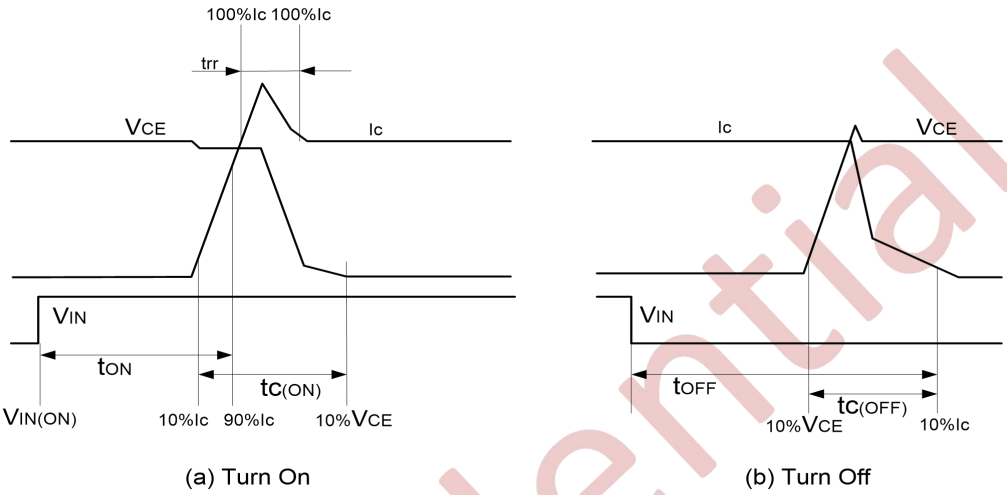

Fig. 3 Switching Time Definitions

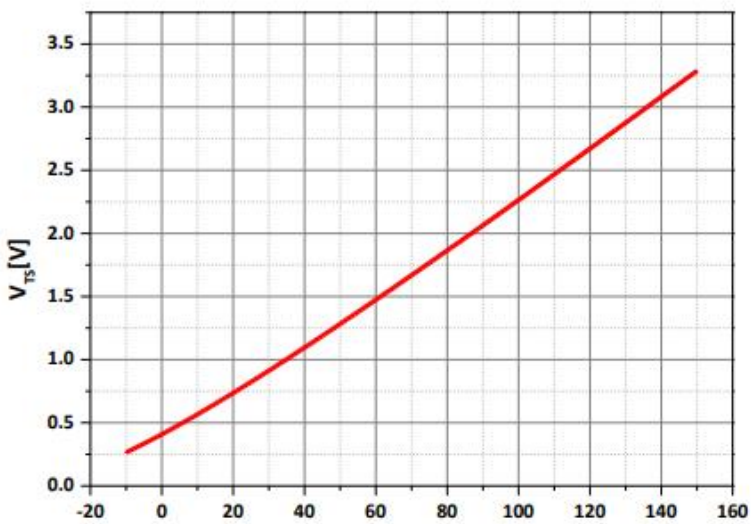

Fig. 4 Curves of HVIC Temperature detection—voltage curve

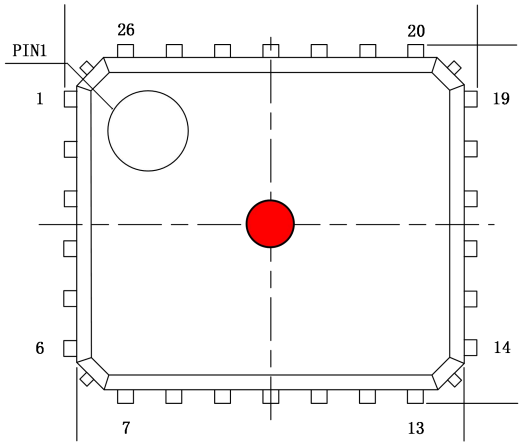

Fig. 5 Case Temperature Measurement

11.2 Time Charts of Protective Function

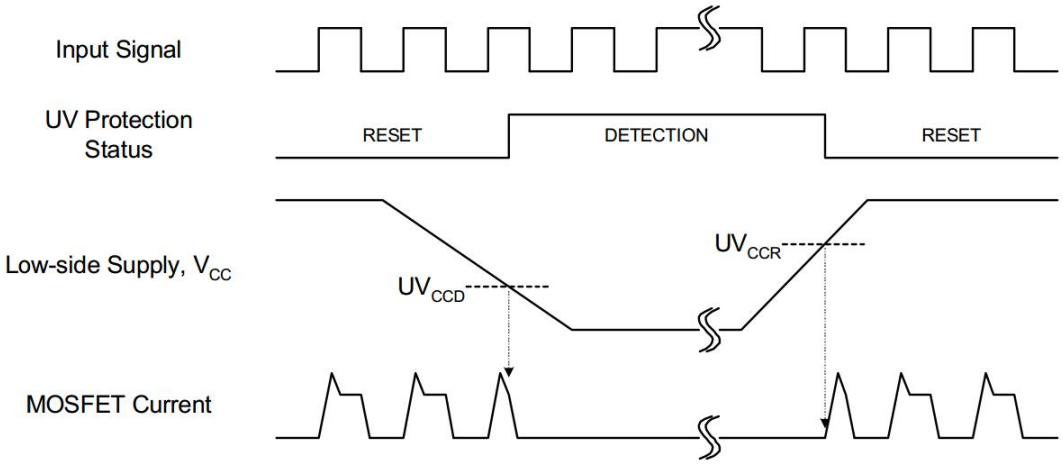

Fig. 6 Under voltage Protection (Low-side)

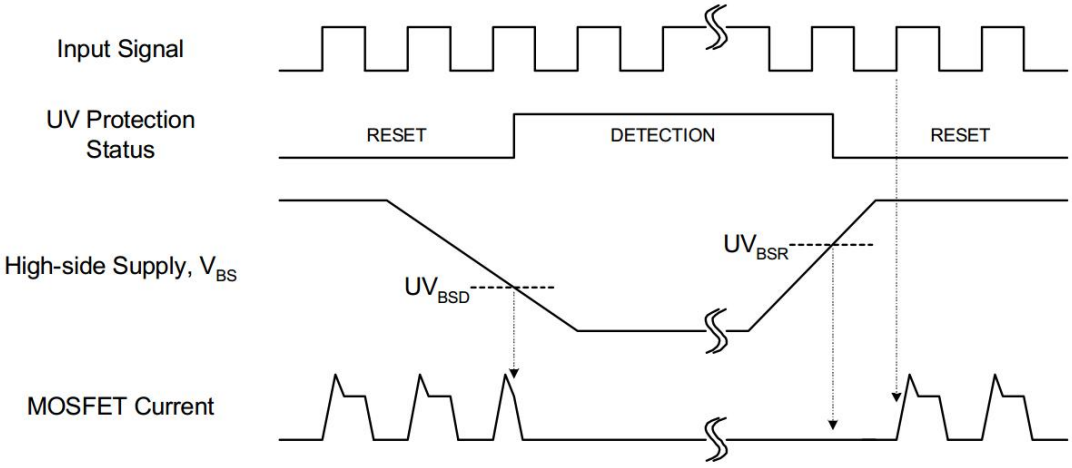

Fig. 7 Under voltage Protection (High-side)

12. NSH803PQ Typical Application Circuit

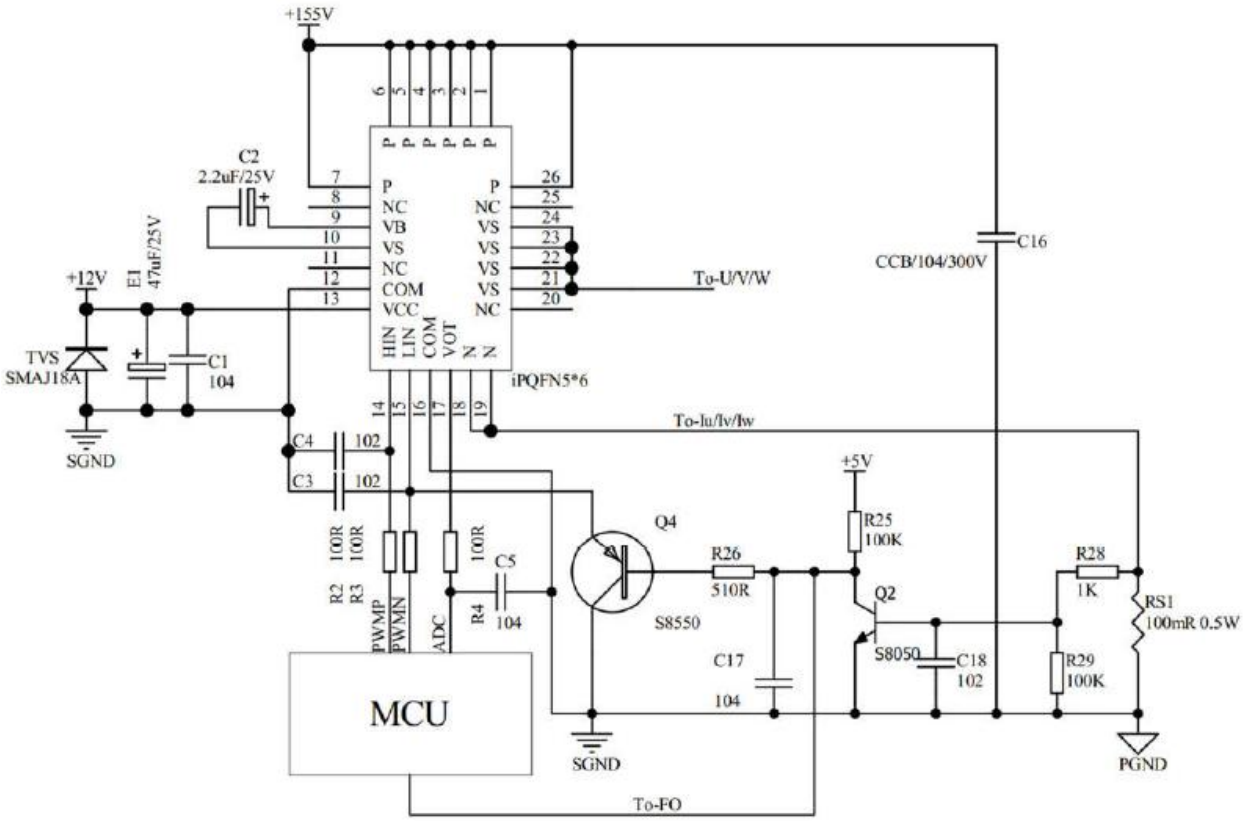

Fig.8 Typical Application Connection NSH803PQ

HIN	LIN	Output	Note
0	0	High Resistance	Both MOSFET Off
0	1	0	Low side MOSFET On
1	0	VDC	High side MOSFET On
1	1	Forbidden	Shoot through
open	open	High Resistance	Both MOSFET Off

1、 使用时，模块要做好防潮处理，建议刷三防漆或者外部点绝缘胶
2、 使用时，建议检测模块17脚温度信号，增加过温保护或者降功率，最高保护温度120℃（VOT=2.5V）。
3、 使用时，尽量做好散热处理，可以参考加绝缘垫片或者陶瓷片，粘合到散热器上。

13. Detailed Package Outline Drawing

PQFN5x6 Package Dimensions

Size / Symbol	MIN(mm)	TYP(mm)	MAX(mm)	Size / Symbol	MIN(mm)	TYP(mm)	MAX(mm)
A	0.950	1.100	1.250	E3	1.325	1.475	1.625
b	0.150	0.250	0.380	E4	1.325	1.475	1.625
c	0.154	0.254	0.354	E5	0.850	1.000	1.150
D	5.958	6.108	6.258	E6	0.300	0.450	0.600
D1	6.250	6.400	6.550	e	0.650	0.750	0.850
D2	1.935	2.085	2.325	i	/	/	0.200
D3	1.400	1.550	1.700	k	1.000	/	/
D4	2.575	2.725	2.875	L	0.050	0.200	0.350
E	4.958	5.108	5.258	L1	0.450	0.600	0.750
E1	5.250	5.400	5.550	θ	9˚	12˚	15˚
E2	1.515	1.665	1.815	ϕ	1.000	1.200	1.400
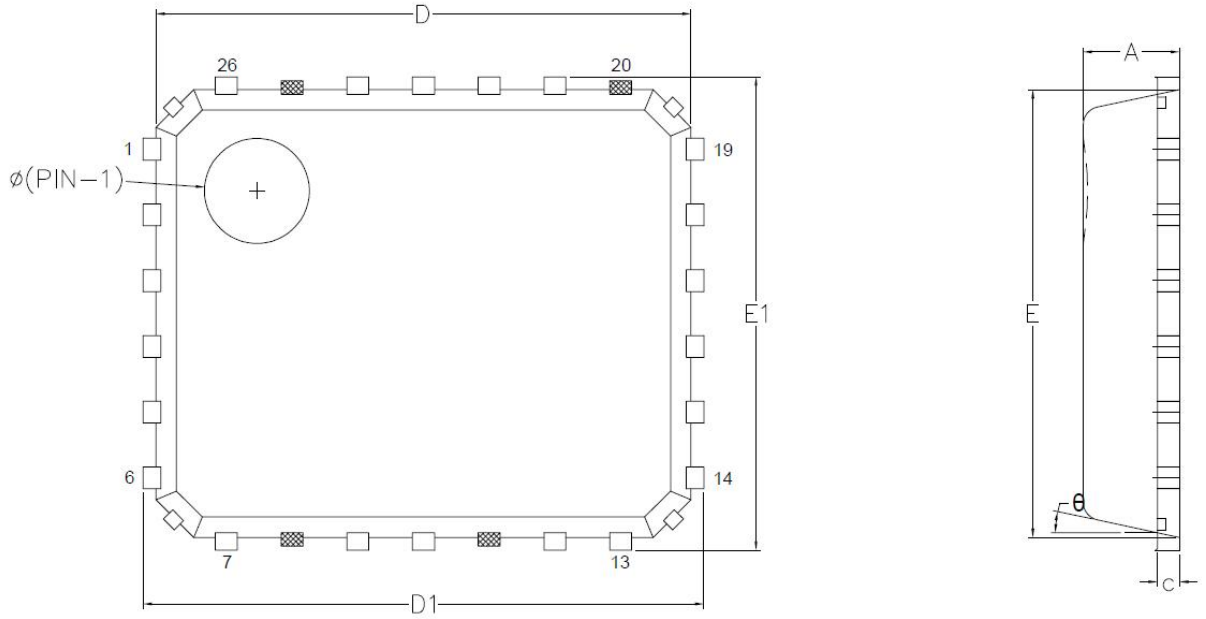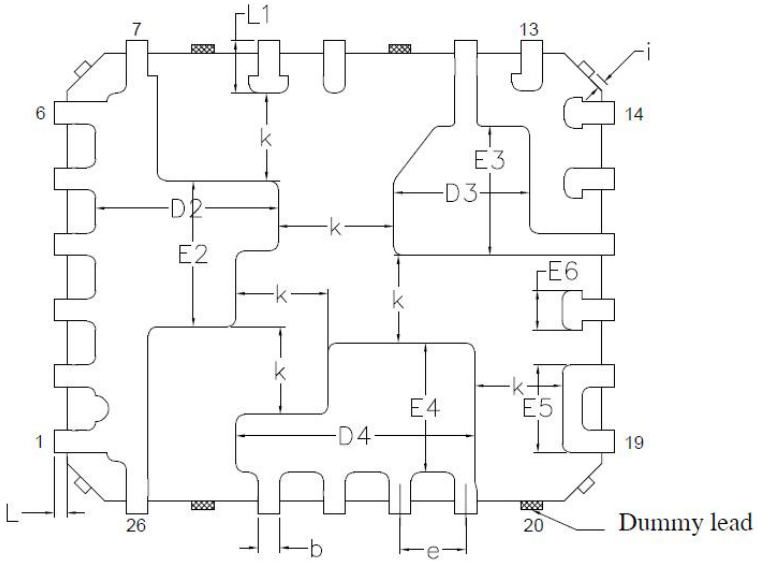
Package Outlines