# NSH706PQ 7A, 600V Half-Bridge IPM

## 1. Features

- Under-voltage lockout for both channels
- High-level effective, supported 3.3V, 5V and 15V input
- Integrated gate drivers and bootstrap functionality
- Temperature detected output for MCU control
- Cross-conduction prevention logic
- Isolation 1500 VRMS min
- 600V maximum operating voltage
- 500mΩ Rdson @25℃
- Maximum Power Dissipation for each MOSFET --14.2W
- High-Side Under-Voltage Protection
  --Trigger level=8.2V
  --Reset level= 8.9V

## 2. Applications

- BLDC Motor control

## 3. Description

NSH706PQ is a 7A, 600V half-brigde intelligence power module designed for motor drive applications, integrated 7A/600V MOSFET gate driver and bootstrap functionality in a small PQFN 5×6mm package. It can be flexibly applied to single-phase and three-phase DC brushless motor drive.

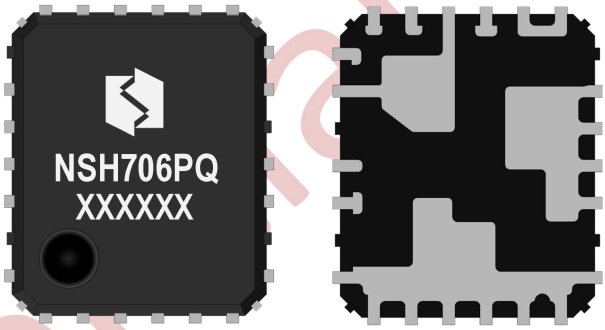


**Device Information**

| Part Number | Package | Body size |
|---|---|---|
| NSH706PQ | PQFN5x6 | 5mm x 6mm |

Confidential

**Internal Electrical Schematic**

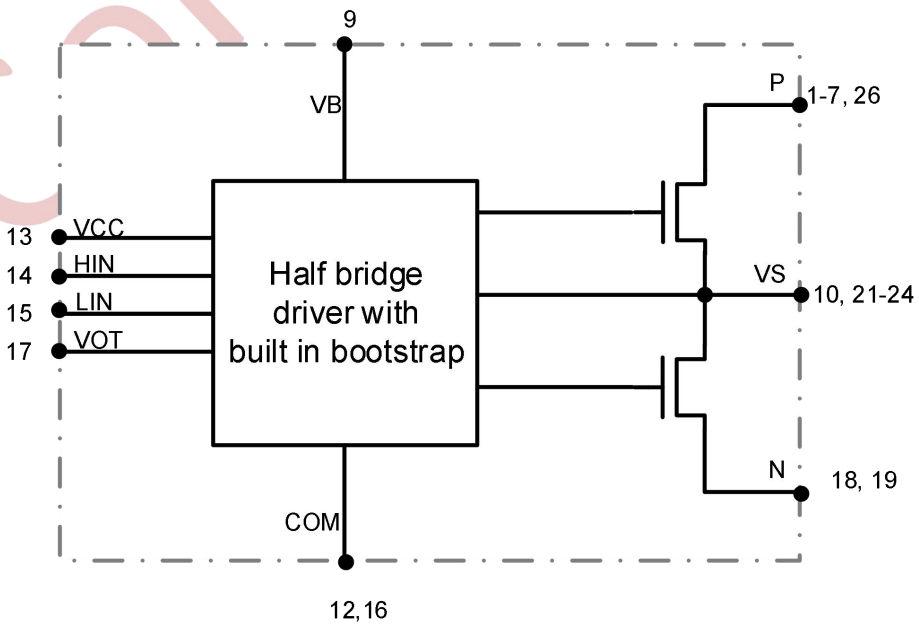


**Fig.1 Internal Electrical Schematic**

Copyright © 2022, NSIC Technology (Wuxi) Co., LTD
国硅集成电路技术(无锡)有限公司

## 4. Selection Guide

| PART No. | Input signal | Deadtime | UVLO | Built in BSD | $BV_{DSS}$ | Rdson |
|---|---|---|---|---|---|---|
| NSH706PQ | HIN, LIN | 540ns | 8.2/8.9V | YES | 600V | 500mΩ |

## 5. Order Information

| PART No. | Marking | Package Type | packing of products | SPQ |
|---|---|---|---|---|
| NSH706PQ | NSH706PQ<br>XXXXXX | **PQFN5x6** | Tape and reel | 6 K |

## 6. Revision History

| Version | Items | Time |
|---|---|---|
| V1.0 | Created | 2022.04.01 |
| V1.1 | Advanced EMI performance | 2023.05.29 |

Confidential


Copyright © 2023, NSIC Technology (Wuxi) Co., LTD
国硅集成电路技术(无锡)有限公司

# 目录

1. FEATURES ..... 1
2. APPLICATIONS ..... 1
3. DESCRIPTION ..... 1
4. SELECTION GUIDE ..... 2
5. ORDER INFORMATION ..... 2
6. REVISION HISTORY ..... 2
7. PIN-OUT DESCRIPTION ..... 4
8. ABSOLUTE MAXIMUM RATINGS ..... 5
8.1 INVERTER PART ..... 5
8.2 CONTROL PART ..... 5
8.3 BOOTSTRAP FUNCTIONALITY ..... 5
8.4 TOTAL SYSTEM ..... 5
8.5 THERMAL AND MECHANICAL CHARACTERISTICS ..... 5
9. RECOMMENDED OPERATING CONDITIONS ..... 6
10. ELECTRICAL CHARACTERISTICS ..... 7
10.1 CONVERT PART ..... 7
10.2 CONTROL PART ..... 7
11. FUNCTION DESCRIPTION ..... 8
11.1 BASIC FUNCTION DESCRIPTION ..... 8
11.2 TIME CHARTS OF PROTECTIVE FUNCTION ..... 9
12. NSH706PQ TYPICAL APPLICATION CIRCUIT ..... 10
13. DETAILED PACKAGE OUTLINE DRAWINGS ..... 11

Confidential

Copyright © 2023, NSIC Technology (Wuxi) Co., LTD
国硅集成电路技术(无锡)有限公司

## 7. Pin-Out Description

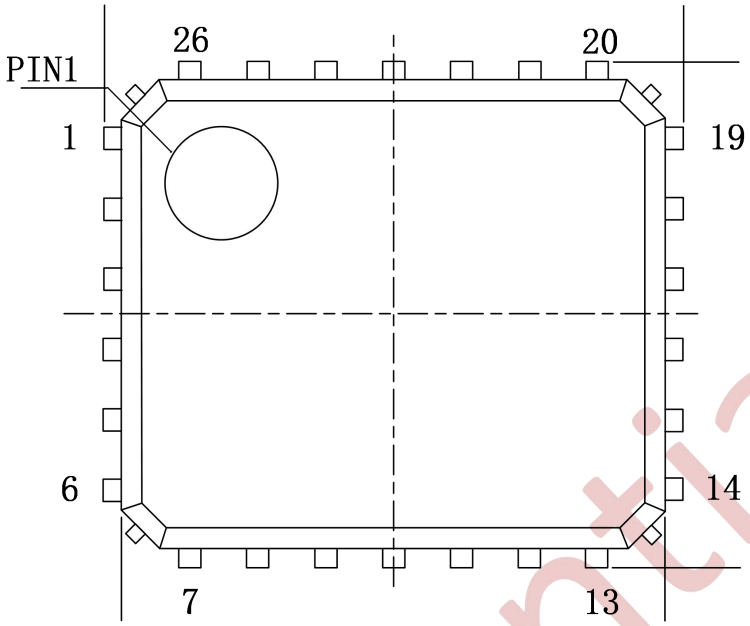


**Fig2 Footprint Description**

**Table7-1 Pin description**

| PIN | Name | Description |
|---|---|---|
| 13 | VCC | Gate Drive Supply |
| 14 | HIN | Logic Input for High Side |
| 15 | LIN | Logic Input for Low Side |
| 17 | VOT | Temperature Signal Out |
| 12、16 | COM | Low Side Gate Drive Return |
| 18、19 | N | Low Side Source Connection |
| 10、21-24 | VS | Phase Output |
| 1-7、26 | P | DC Bus |
| 9 | VB | High Side Floating Supply (Bootstrap Cap Connection) |

Confidential


Copyright © 2023, NSIC Technology (Wuxi) Co., LTD
国硅集成电路技术(无锡)有限公司

# 8. Absolute Maximum Ratings

Tj= 25°C, Unless Otherwise Specified

## 8.1 Inverter Part

| Symbol | Parameter | Conditions | Ratings | Unit |
|---|---|---|---|---|
| $V_{DSS}$ | Drain-Source Voltage of MOSFET | $T_C$ = 25°C | 600 | V |
| $I_C$ | MOSFET Current, Continuous | $T_C$ = 25°C（Tc refer to Fig:5） | 4 | A |
| $I_{CM}$ | MOSFET Pulse Current, Peak | $T_C$ = 25°C, less than 100us | 7 | A |
| $P_D$ | Maximum Power Dissipation | $T_C$ = 25°C， For MOSFET | 14.2 | W |

## 8.2 Control Part

| Symbol | Parameter | Conditions | Ratings | Unit |
|---|---|---|---|---|
| $V_{CC}$ | Control Supply Voltage | Applied between $V_{CC}$ and COM | 20 | V |
| $V_{BS}$ | High-side Bias Voltage | Applied between VB and VS | 20 | V |
| $V_{IN}$ | Input Signal Voltage | Applied between $V_{IN}$ and COM | -0.3~$V_{CC}$+0.3 | V |

## 8.3 Bootstrap Functionality

| Symbol | Description | Conditions | Rating | Unit |
|---|---|---|---|---|
| $V_{RRMB}$ | Maximum Repetitive Reverse Voltage | Tc = 25°C | 600 | V |
| $I_{FB}$ | Forward Current | Tc = 25°C | 0.25 | A |
| $I_{FPB}$ | Forward Peak Current, Peak | Tc = 25°C，Less than 1mS | 0.5 | A |

## 8.4 Total System

| Symbol | Parameter | Conditions | Ratings | Unit |
|---|---|---|---|---|
| Tj | Operating Junction Temperature | | -40~150 | ℃ |
| TSTG | Storage Temperature | Tc = 25°C | -40~125 | ℃ |
| VISO | Isolation Voltage | 60Hz, Sinusoidal， AC 1 min， between pins and heat-sink plate | 1500 | Vrms |

NOTE1：To insure safe operation of the IPM, the average junction temperature should be limited to TJ ≤ 150°C (@Tc ≤ 100°C).

## 8.5 Thermal and Mechanical Characteristics

| Symbol | Parameter | Conditions | Ratings | Unit |
|---|---|---|---|---|
| Rth(J-B) | Thermal resistance, junction to mounting pad, each MOSFET | For Each MOSFET | 1.0 | °C/W |
| Rth(J-A) | Thermal resistance, junction to ambient, each MOSFET | For Each MOSFET | 40 | °C/W |

Confidential

Copyright © 2023, NSIC Technology (Wuxi) Co., LTD
国硅集成电路技术(无锡)有限公司

## 9. Recommended Operating Conditions

| Symbol | Parameter | Conditions | Min. | Typ. | Max. | Unit |
|---|---|---|---|---|---|---|
| $V_{PN}$ | Supply Voltage | Applied between P and N | - | 300 | 450 | V |
| $V_{CC}$ | Control Supply Voltage | Applied between VCC and COM | 13.5 | 15.0 | 16.5 | V |
| $V_{BS}$ | High-Side Bias Voltage | Applied between VB and VS | 13.5 | 15.0 | 16.5 | V |
| $V_{IN(ON)}$ | Input ON Threshold Voltage | Applied between VIN and COM | 3.0 | - | $V_{CC}$ | V |
| $V_{IN(OFF)}$ | Input OFF Threshold Voltage | | 0 | - | 0.6 | V |
| $t_{dead}$ | Blanking Time for Preventing Arm-Short | $V_{CC}$ = $V_{BS}$ = 13.5 ~ 16.5 V, Tj <150°C | 1.0 | - | - | us |
| $F_{PWM}$ | PWM Switching Frequency | Tj <150°C | - | 15 | 20 | kHz |

Confidential


Copyright © 2023, NSIC Technology (Wuxi) Co., LTD
国硅集成电路技术(无锡)有限公司

# 10. Electrical Characteristics

TJ= 25°C, Unless Otherwise Specified

## 10.1 Convert Part

| Symbol | Parameter | Conditions | Min. | Typ. | Max. | Unit |
|---|---|---|---|---|---|---|
| $BV_{DSS}$ | Drain - Source Breakdown Voltage | $V_{IN}$ = 0 V, $I_D$ = 1mA （NOTE 2） | 600 | - | - | V |
| $I_{DSS}$ | Zero Gate Voltage Drain Current | $V_{IN}$ = 0 V, $V_{DS}$ = 600 V | - | - | 1 | mA |
| $V_{SD}$ | Drain - Source Diode Forward Voltage | $V_{CC}$ = $V_{BS}$ = 15V, $V_{IN}$ = 0 V, $I_D$ =-0.5 A | - | 1 | - | V |
| $R_{DS(ON)}$ | Drain - Source On -resistance | $V_{CC}$ = 15V, $I_D$ = 1A, Tj = 25 ℃ | | 500 | 700 | mΩ |
| $t_{ON}$ | Switching Times | $V_{PN}$ = 300 V, $V_{CC}$ = $V_{BS}$ = 15 V, $I_D$ = 0.5 A $V_{IN}$ = 0/5 V, Inductive Load L = 3 mH （NOTE 3） | - | 860 | - | ns |
| $t_{OFF}$ | | | - | 480 | - | ns |
| $t_{rr}$ | | | - | 180 | - | ns |
| $E_{ON}$ | | | - | 41 | - | μJ |
| $E_{OFF}$ | | | - | 9 | - | μJ |
| $R_{BSOA}$ | Reverse Bias Safe Operating Area | $V_{PN}$ = 400 V, $V_{CC}$ = $V_{BS}$ = 15 V, $I_D$ = $I_{DP}$, $V_{DS}$ = $BV_{DSS}$, T = 150°C | Full Square | | | |

NOTE 2：$BV_{DSS}$ is the absolute maximum voltage rating between Drain and Source terminal of each MOSFET inside IPM. VPN should be sufficiently less than this value considering the effect of the stray inductance so that VDS should not exceed $BV_{DSS}$ in any case.

NOTE 3: $t_{ON}$ and $t_{OFF}$ include the propagation delay time of the internal drive IC. Listed values are measured at the laboratory test condition, and they can be different according to the field applications due to the effect of different printed circuit boards and wirings. Please see Fig 3 for the switching time definition.

## 10.2 Control Part

| Symbol | Parameter | Conditions | | Min. | Typ. | Max. | Unit |
|---|---|---|---|---|---|---|---|
| $I_{QCC}$ | Quiescent VCC Supply Current | $V_{CC}$ = 15V $V_{IN}$ = 5V | Applied between VCC and COM | - | 360 | 500 | μA |
| $I_{QB}$ | Quiescent VBS Supply Current | $V_{DB}$ = 15V $V_{IN}$ = 5V | Applied between VB -VS | - | 70 | 210 | μA |
| $UV_{CCD}$ | Low-Side Under-Voltage Protection | VCC Under-Voltage Protection Detection Level | | 7.4 | 8.2 | 9.0 | V |
| $UV_{CCR}$ | | VCC Under-Voltage Protection Reset Level | | 8.0 | 8.9 | 9.8 | V |
| $UV_{BSD}$ | High-Side Under-Voltage Protection | VBS Under-Voltage Protection Detection Level | | 7.4 | 8.2 | 9.0 | V |
| $UV_{BSR}$ | | VBS Under-Voltage Protection Reset Level | | 8.0 | 8.9 | 9.8 | V |
| $V_{TS}$ | HVIC Temperature Sensing Voltage Output | $V_{CC}$ = 15 V, $T_{HVIC}$ = 25°C (Fig:4) | | 0.6 | 0.75 | 0.90 | V |
| $V_{IH}$ | ON Threshold Voltage | Logic HIGH Level, Applied between VIN and COM | | 2.5 | - | | V |
| $V_{IL}$ | OFF Threshold Voltage | Logic Low Level, Applied between VIN and COM | | | - | 0.8 | V |
| DT | Deadtime | Tc = 25°C ,VCC=15V | | 400 | 540 | 680 | ns |

Confidential

Copyright © 2023, NSIC Technology (Wuxi) Co., LTD
国硅集成电路技术(无锡)有限公司

# 11. Function Description

## 11.1 Basic Function description

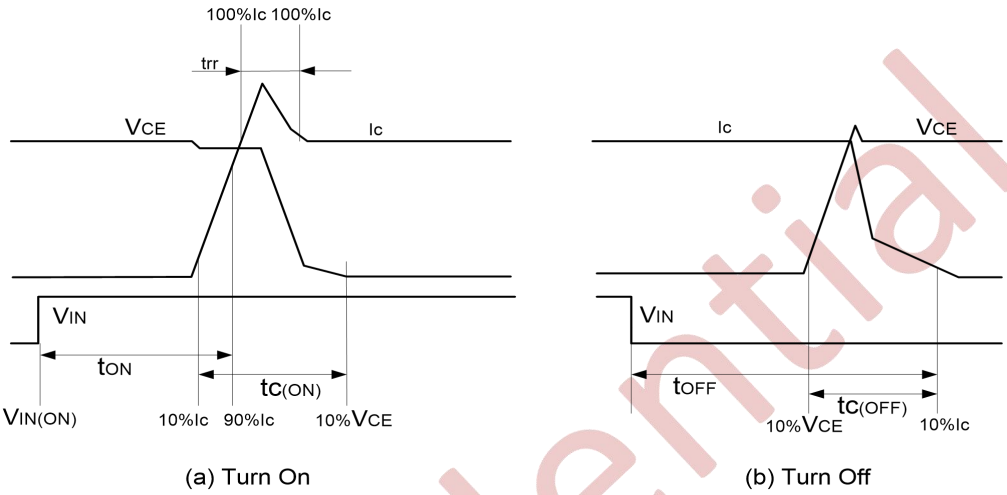


**Fig. 3 Switching Time Definitions**

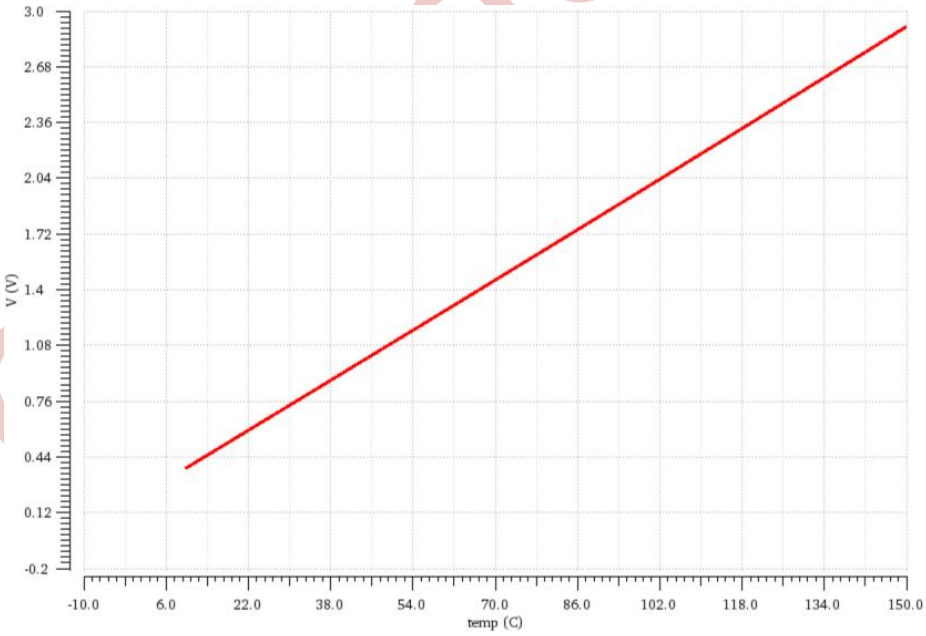


**Fig. 4 Curves of HVIC Temperature detection—voltage curve**

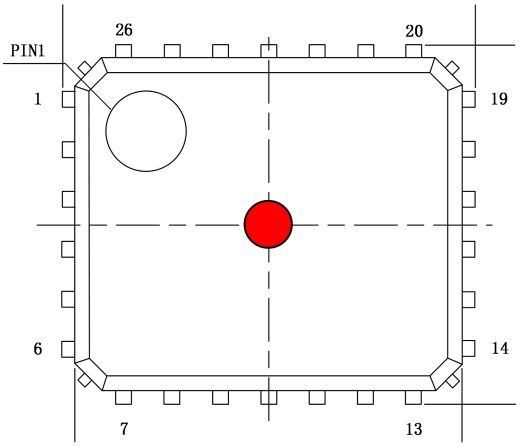


**Fig. 5 Case Temperature Measurement**


Copyright © 2023, NSIC Technology (Wuxi) Co., LTD
国硅集成电路技术(无锡)有限公司

## 11.2 Time Charts of Protective Function

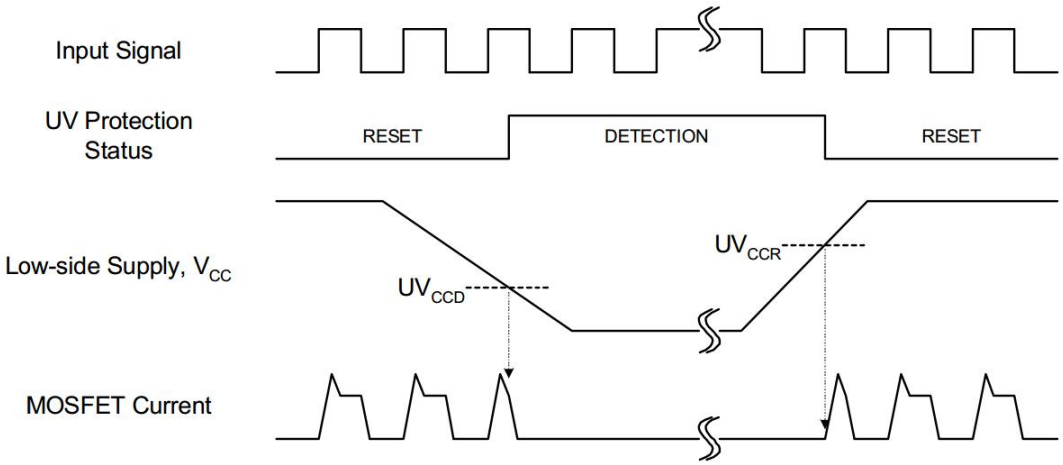


**Fig. 6 Under voltage Protection (Low-side)**

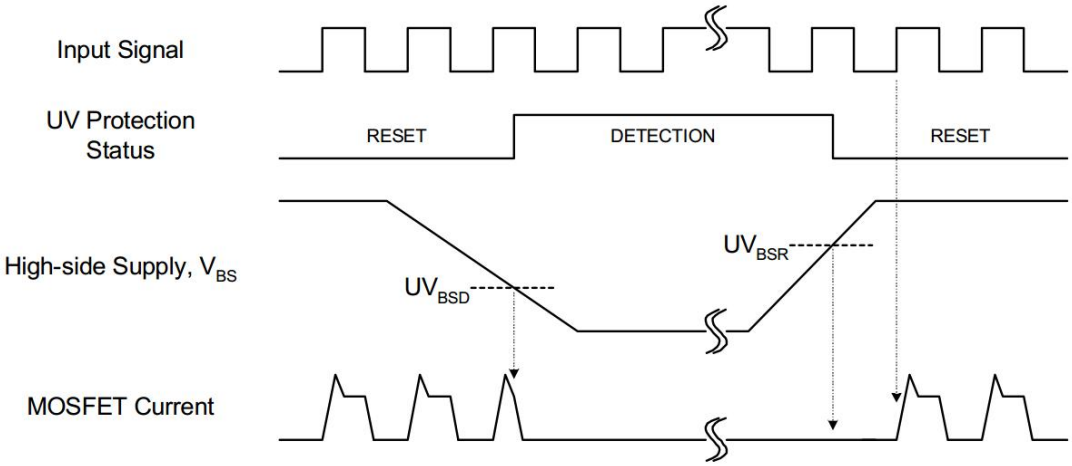


**Fig. 7 Under voltage Protection (High-side)**

Copyright © 2023, NSIC Technology (Wuxi) Co., LTD
国硅集成电路技术(无锡)有限公司

## 12. NSH706PQ Typical Application Circuit

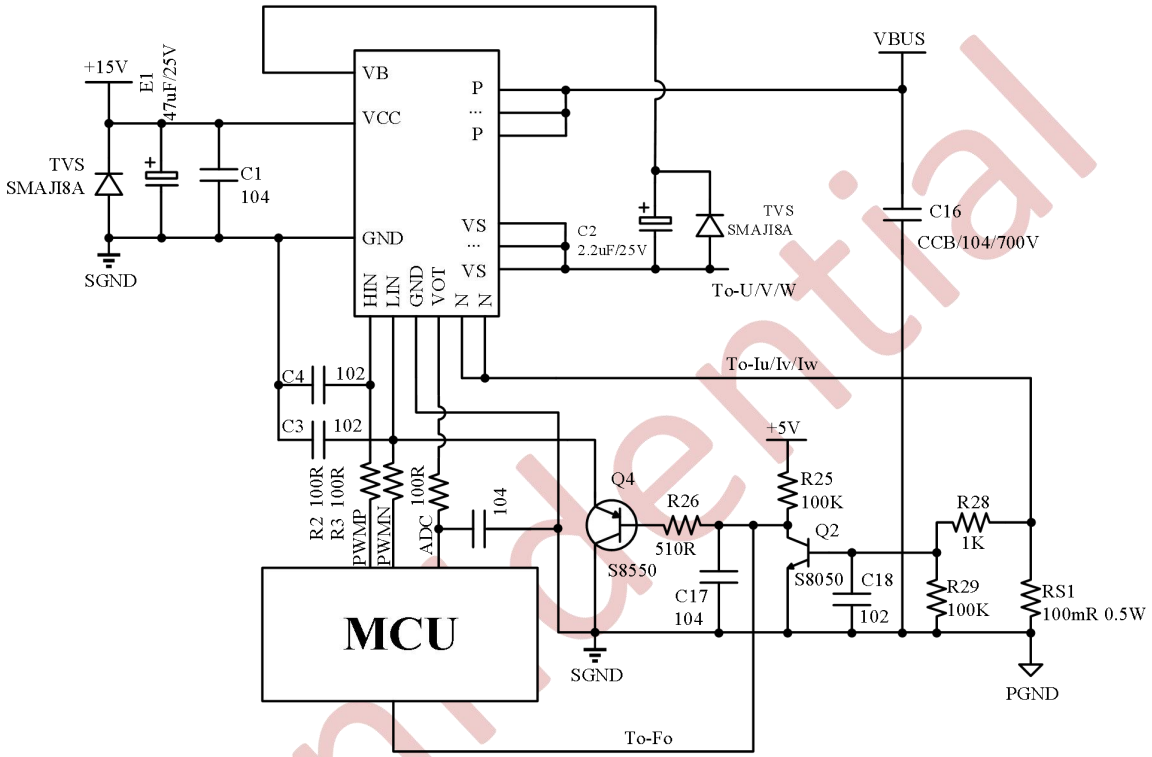


**Fig.8 Typical Application Connection NSH706PQ**

| HIN | LIN | Output | Note |
|---|---|---|---|
| 0 | 0 | High Resistance | Both MOSFET Off |
| 0 | 1 | 0 | Low side MOSFET On |
| 1 | 0 | VDC | High side MOSFET On |
| 1 | 1 | Forbidden | Both MOSFET Off |
| open | open | High Resistance | Both MOSFET Off |

1、 使用时，模块要做好防潮处理，建议刷三防漆或者外部点绝缘胶
2、 使用时，建议检测模块17脚温度信号，增加过温保护或者降功率，最高保护温度120℃（VOT=2.5V）。
3、 使用时，尽量做好散热处理，可以参考加绝缘垫片或者陶瓷片，粘合到散热器上。

Confidential


Copyright © 2023, NSIC Technology (Wuxi) Co., LTD
国硅集成电路技术(无锡)有限公司

## 13. Detailed Package Outline Drawing

### PQFN5x6 Package Dimensions

| Size / Symbol | MIN(mm) | TYP(mm) | MAX(mm) | Size / Symbol | MIN(mm) | TYP(mm) | MAX(mm) |
|---|---|---|---|---|---|---|---|
| A | 0.950 | 1.100 | 1.250 | E3 | 1.325 | 1.475 | 1.625 |
| b | 0.150 | 0.250 | 0.380 | E4 | 1.325 | 1.475 | 1.625 |
| c | 0.154 | 0.254 | 0.354 | E5 | 0.850 | 1.000 | 1.150 |
| D | 5.958 | 6.108 | 6.258 | E6 | 0.300 | 0.450 | 0.600 |
| D1 | 6.250 | 6.400 | 6.550 | e | 0.650 | 0.750 | 0.850 |
| D2 | 1.935 | 2.085 | 2.325 | i | / | / | 0.200 |
| D3 | 1.400 | 1.550 | 1.700 | k | 1.000 | / | / |
| D4 | 2.575 | 2.725 | 2.875 | L | 0.050 | 0.200 | 0.350 |
| E | 4.958 | 5.108 | 5.258 | L1 | 0.450 | 0.600 | 0.750 |
| E1 | 5.250 | 5.400 | 5.550 | θ | 9˚ | 12˚ | 15˚ |
| E2 | 1.515 | 1.665 | 1.815 | ϕ | 1.000 | 1.200 | 1.400 |
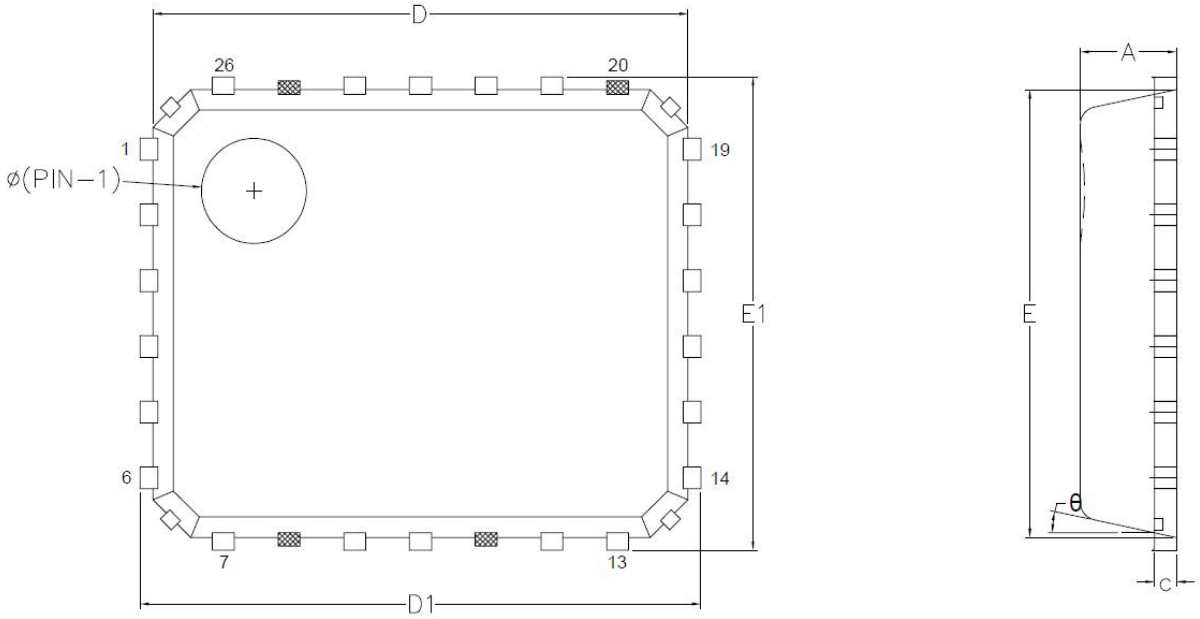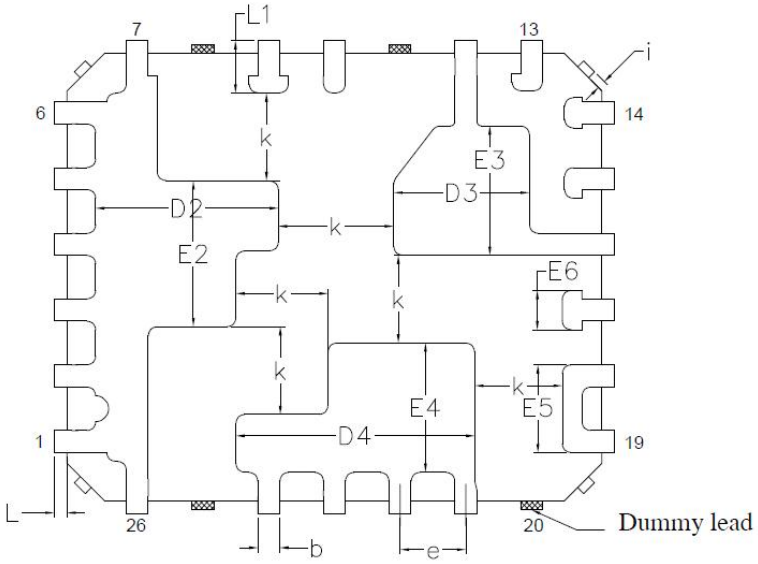
### Package Outlines