REV.	DESCRIPTION	ECN NO.	NAME	DATE

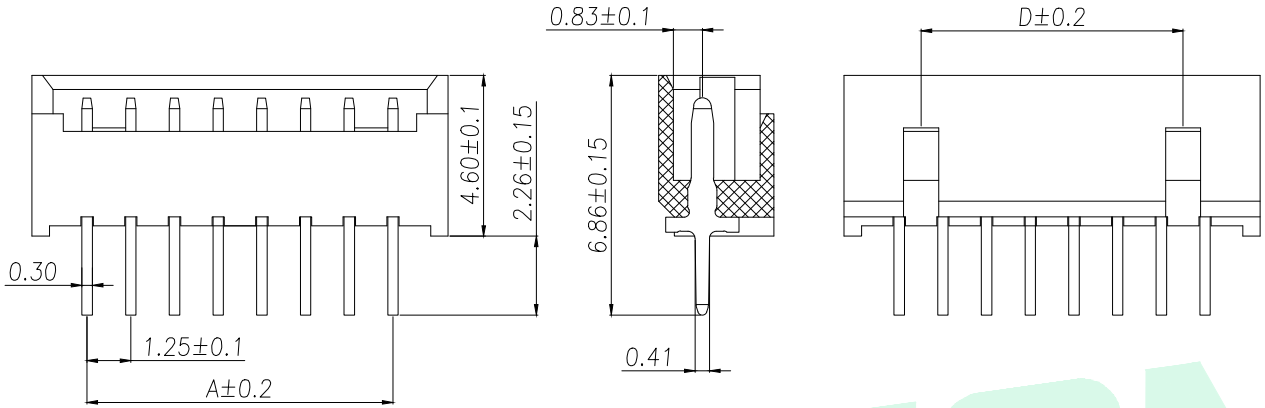

Part No	Pin	A	B	C	D
AF-MX1.25-2PZZ-W1	2	1.25	4.40	3.20	
AF-MX1.25-3PZZ-W1	3	2.50	5.65	4.45	
AF-MX1.25-4PZZ-W1	4	3.75	6.90	5.70	2.50
AF-MX1.25-5PZZ-W1	5	5.00	8.15	6.95	3.75
AF-MX1.25-6PZZ-W1	6	6.25	9.40	8.20	5.00
AF-MX1.25-7PZZ-W1	7	7.50	10.65	9.45	6.25
AF-MX1.25-8PZZ-W1	8	8.75	11.90	10.70	7.50
AF-MX1.25-9PZZ-W1	9	10.00	13.15	11.95	8.75
AF-MX1.25-10PZZ-W1	10	11.25	14.40	13.20	10.00
AF-MX1.25-11PZZ-W1	11	12.50	15.65	14.45	11.25
AF-MX1.25-12PZZ-W1	12	13.75	16.90	15.70	12.50
AF-MX1.25-13PZZ-W1	13	15.00	18.15	16.95	13.75
AF-MX1.25-14PZZ-W1	14	16.25	19.40	18.20	15.00
AF-MX1.25-15PZZ-W1	15	17.50	20.65	19.45	16.25
AF-MX1.25-16PZZ-W1	16	18.75	21.90	20.70	17.50

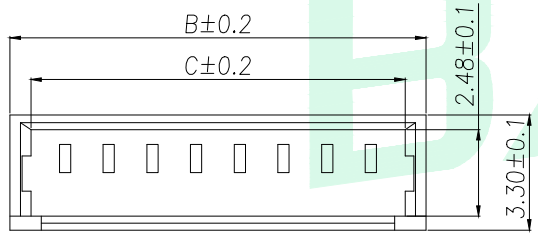

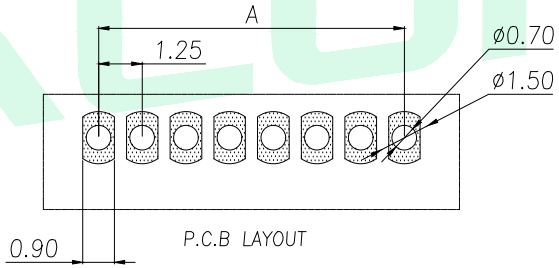

P.C.B LAYOUT

NOTES:

1.BASE: PA66
2.PIN: Brass
3.Solder Tab: Brass

SPECIFICATIONS:

1.Spacing: 1.25
2.Voltage Rating: 125V AC DC
3.Current Rating: 1A AC DC
4.Insulation Resistance: 100MΩ Min
5.Contact Resistance: 20mΩ Max
6.Withstanding voltage: 500V AC 1/Minute
7.Temperatuer Range: -25℃ ~+ 85℃

GENERAL TOLERANCE						
DIM.	TOL.	DONGGUAN BAOXUN PRECISION TECHNOLOGY CO., LTD				BXCONN®
x.	±0.20	TITLE: WAFER 1.25 直针				
x.x	±0.10					
x.xx	±0.05					
GENERAL ANGLE:		DWG. NO.: AF-MX1.25-NPZZ-W1			CHECKED: MAX	
x.°	±5°					
x.x°	±3°	PART NO.: AF-MX1.25-NPZZ-W1			DRAWN: ELLA	
x.xx°	±1°					
		UNIT: mm	SCALE: none	SHEET: 1of 1	DWG. SIZE: A4	LAYER: bxconn	APPROVED: WILL