REV.	DESCRIPTION	ECN NO.	NAME	DATE

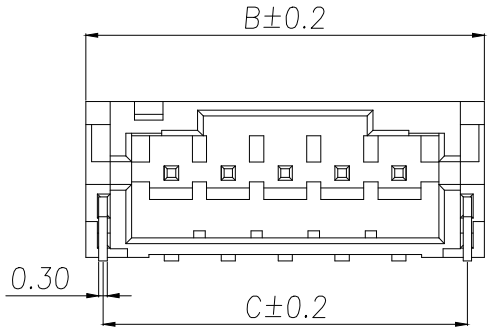

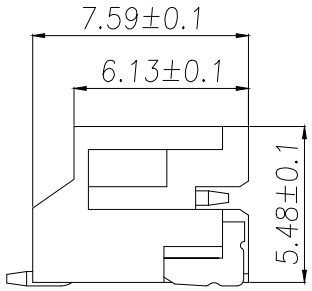

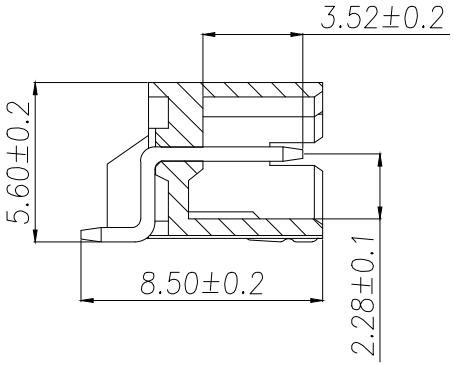

Part No	Pin	A	B	C
AF-PH2.0-2PWT-W1	2	2.00	8.00	6.80
AF-PH2.0-3PWT-W1	3	4.00	10.00	8.80
AF-PH2.0-4PWT-W1	4	6.00	12.00	10.80
AF-PH2.0-5PWT-W1	5	8.00	14.00	12.80
AF-PH2.0-6PWT-W1	6	10.00	16.00	14.80
AF-PH2.0-7PWT-W1	7	12.00	18.00	16.80
AF-PH2.0-8PWT-W1	8	14.00	20.00	18.80
AF-PH2.0-9PWT-W1	9	16.00	22.00	20.80
AF-PH2.0-10PWT-W1	10	18.00	24.00	22.80
AF-PH2.0-11PWT-W1	11	20.00	26.00	24.80
AF-PH2.0-12PWT-W1	12	22.00	28.00	26.80
AF-PH2.0-13PWT-W1	13	24.00	30.00	28.80
AF-PH2.0-14PWT-W1	14	26.00	32.00	30.80
AF-PH2.0-15PWT-W1	15	28.00	34.00	32.80
AF-PH2.0-16PWT-W1	16	30.00	36.00	34.80

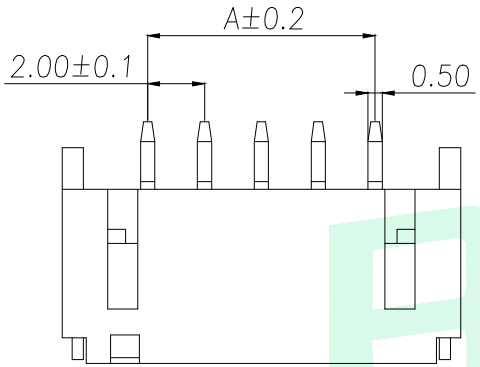

NOTES:

1.BASE: LCP
2.PIN: Brass
3.Solder Tab: Brass

SPECIFICATIONS:

1.Spacing: 2.0
2.Voltage Rating: 250V AC DC
3.Current Rating: 2A AC DC
4.Insulation Resistance: 800MΩ Min
5.Contact Resistance: 20mΩ Max
6.Withstanding voltage: 500V AC 1/Minute
7.Temperatuer Range: -25℃ ~+ 85℃

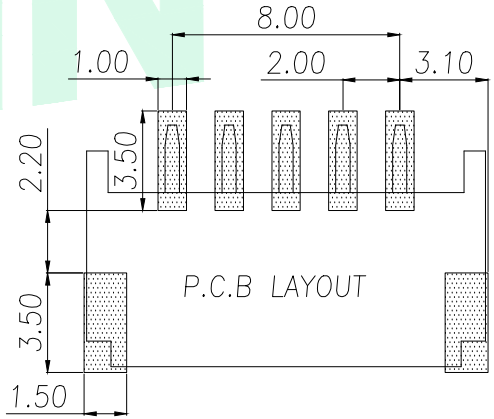

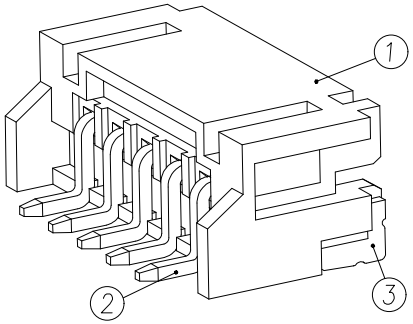

GENERAL TOLERANCE					
DIM.	TOL.	DONGGUAN BAOXUN PRECISION TECHNOLOGY CO., LTD			BXCONN®
x.	±0.20	TITLE: WAFER 2.00 卧贴			
x.x	±0.10				
x.xx	±0.05				
GENERAL	ANGLE:	DWG. NO.: AF-PH2.0-NPWT-W1		CHECKED: MAX	
x.°	±5°				
x.x°	±3°				
x.xx°	±1°	PART NO.: AF-PH2.0-NPWT-W1		DRAWN: ELLA	
		UNIT: mm	SCALE: none	SHEET: 1of 1	DWG. SIZE: A4	LAYER: bxconn	APPROVED: WILL