REV.	DESCRIPTION	ECN NO.	NAME	DATE

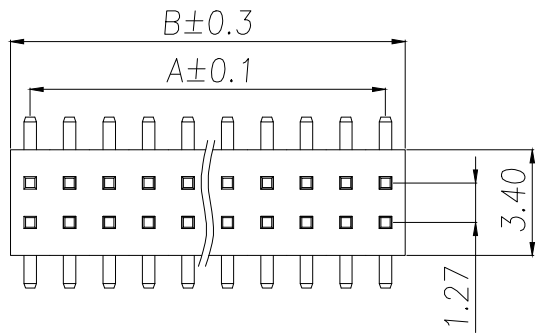

SPECIFICATIONS
Current Rating:1.0 Amps
Withstanding Voltage:AC 500V
Insulation Resistance:1000MΩ Min
Contact Resistance:20mΩ Max
Operation Temperature:−40° to+105°
Insrlator Material:Polyester(UL94V−0)
Contact Material:Brass
Standard:PA6T
Contact Plating:Gold Flash
Max.Processing Temp: 240°C for30−60seconds
(260°C for5seconds)

P/N	PIN	DIM.A	DIM.B
AZ−PZ1.12−V13−2*1P	2*1	0.00	1.27
AZ−PZ1.12−V13−2*2P	2*2	1.27	2.54
AZ−PZ1.12−V13−2*3P	2*3	2.54	3.81
AZ−PZ1.12−V13−2*4P	2*4	3.81	5.08
AZ−PZ1.12−V13−2*5P	2*5	5.08	6.35
AZ−PZ1.12−V13−2*6P	2*6	6.35	7.62
AZ−PZ1.12−V13−2*7P	2*7	7.62	8.89
AZ−PZ1.12−V13−2*8P	2*8	8.89	10.16
AZ−PZ1.12−V13−2*9P	2*9	10.16	11.43
.....	.....	.....	.....
AZ−PZ1.12−V13−2*50P	2*50	(PIN−1)x1.27	(PIN)x1.27

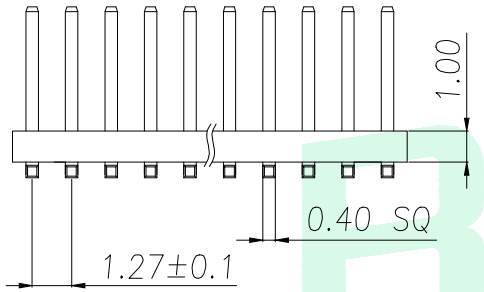

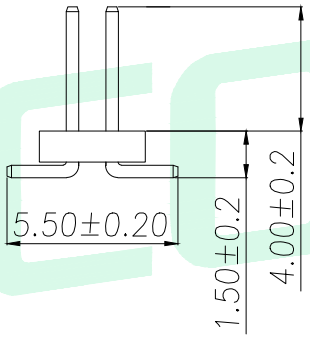

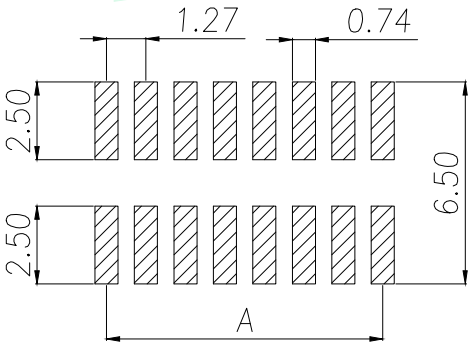

RECOMMEND P.C.B LAYOUT
PCB TOLERANCE:±0.05 (TOP VIEW)

GENERAL TOLERANCE						
DIM.	TOL.	DONGGUAN BAOXUN PRECISION TECHNOLOGY CO., LTD				BXCONN®
x.	±0.30	TITLE: 1.27PH H1.0 2xnPin SMT W3.4 PC5.5 PA4.0 PB1.5 L7.2 6T				
x.x	±0.25					
x.xx	±0.20					
GENERAL	ANGLE:	DWG. NO.: AZ−PZ1.12−V13−2*NP			CHECKED: MAX	
x.°	±5°					
x.x°	±1°	PART NO.: AZ−PZ1.12−V13−2*NP			DRAWN: ELLA	
x.xx°	±0.5°					
UNIT: mm	SCALE: none	SHEET: 1of 1	DWG. SIZE: A4	LAYER: bxconn	APPROVED: WILL	