修订 REV	标记 MARK	修改摘要 REVISION DESCRIPTION	签名 SIGNATURE	日期 DATE
A0		NEW DWG		2016-03-12

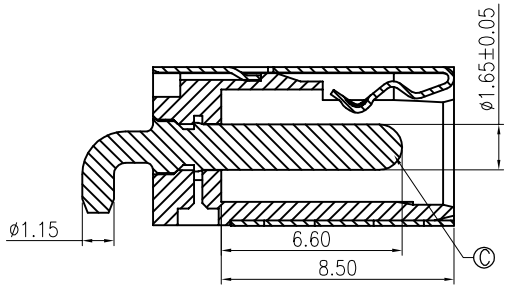

SECTION A-A

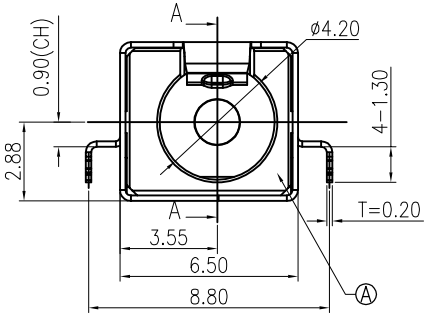

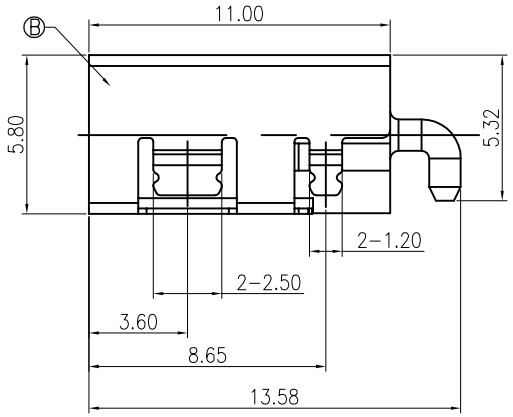

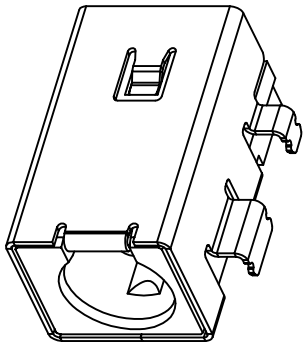

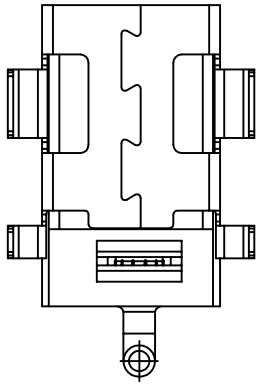

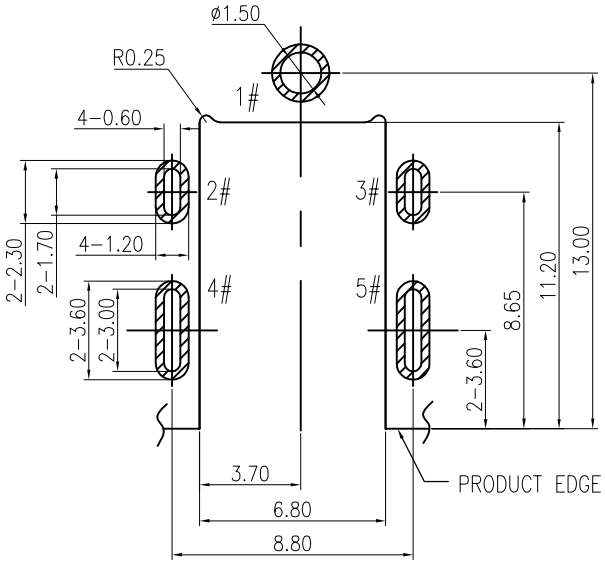

RECOMMENDED PCB LAYOUT(t=1.00)

TOP VIEW TOLERANCE:±0.05

SCHEMATIC
1#(+)
2#/3#4#/5#(-)

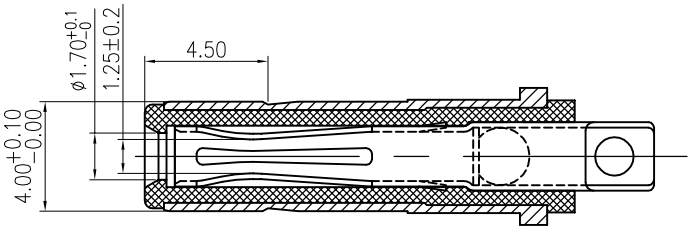

MATING PLUG

DP400170-0038-6H

SPECIFICATION:

1. RATING: DC 20V 7A
2. CONTACT RESISTANCE: 30mΩ MAX.
3. INSULATION RESISTANCE: 100 MΩ MIN.
4. WITHSTAND VOLTAGE: 500 VAC
5. INSERTION FORCE: 3N~30N
6. EXTRACTION FORCE: 3N~30N
7. DURABILITY: 5,000 CYCLES

NO.	DESCRIPTION	MATERIAL	REMARKS	QTY
C	CENTER PIN	BRASS	GOLD FLASH"/Ni 40u"	1
B	SHELL	COPPER ALLOY	Ni 40u"	1
A	HOUSING	HIGH TEMP.THERMOPLASTIC	BLACK	1

深圳市华德共创科技有限公司
Shenzhen Huade co-create Technology Co.,LTD
电话：0755-27111216 传真：0755-29940187

-TOLERANCES- UNLESS OTHERWISE SPECIFIED 公差参数表				TITLE: 产品名称: DC Power Jack 4017 大电流8A，卧式，高可靠，沉板CL=0.9			
X.X	±0.30	X.X°	±3°	APPD: 核准:	PART NO: 产品编号:	DC400170-1093-2H	
X.XX	±0.20	X.XX°	±2°	CHECK: 校对: 王建业	DATE	SCALE	UNIT	CODE NUMBER
X.XXX	±0.10	X.XXX°	±1°	DRAW: 绘图: 黄艳兰	2016-03-12	1:1	mm	A001