修订 REV	标记 MARK	修改摘要 REVISION DESCRIPTION	签名 SIGNATURE	日期 DATE
A0		NEW DWG		2016-03-12

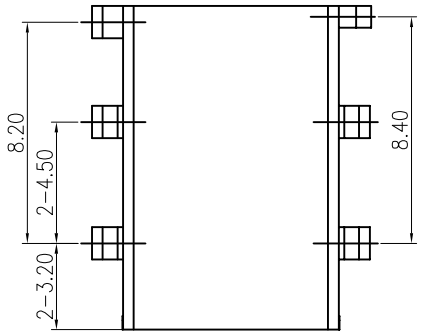

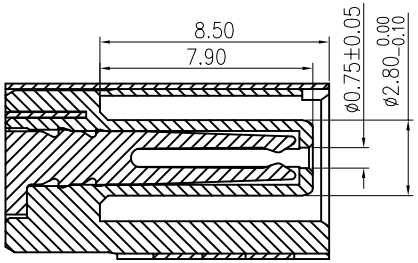

SECTION A-A

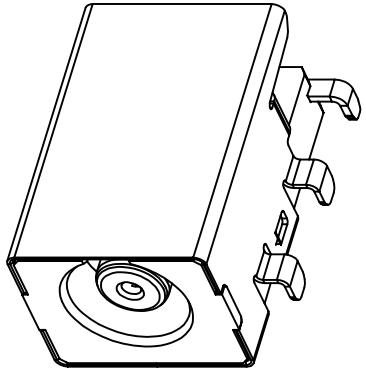

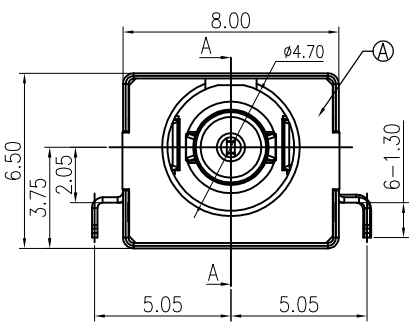

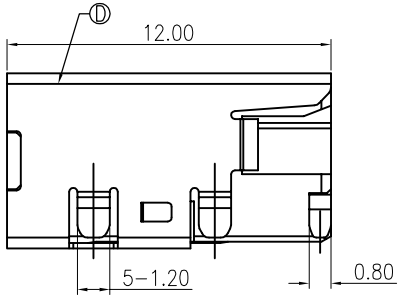

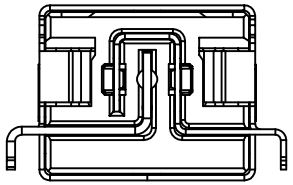

SPECIFICATION:

1. RATING: DC 20V 6.5A
2. CONTACT RESISTANCE: 30mΩ MAX.
3. INSULATION RESISTANCE: 100 MΩ MIN.
4. WITHSTAND VOLTAGE: 500 VAC
5. INSERTION FORCE:30N MAX.
6. EXTRACTION FORCE:6N MIN.
7. DURABILITY: 5,000 CYCLES

SCHEMATIC

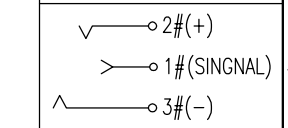

MATING PLUG

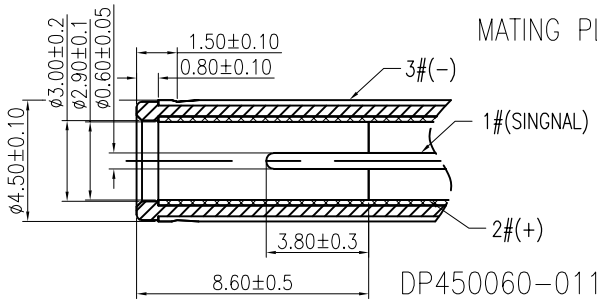

DP450060-0116-6H

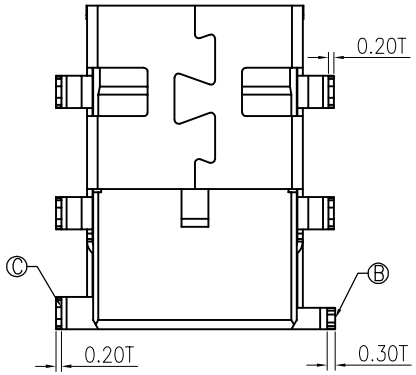

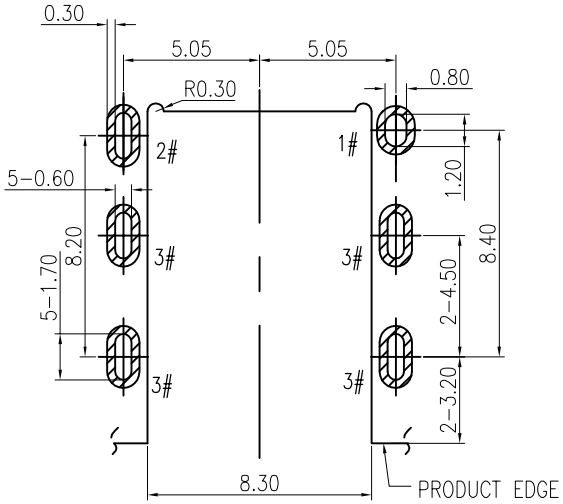

RECOMMENDED PCB LAYOUT

TOP VIEW TOLERANCE:±0.05

NO.	DESCRIPTION	MATERIAL	REMARKS	QTY
D	SHELL	COPPER ALLOY	Ni 50u"MIN.	1
C	SPRING	COPPER ALLOY	GOLD FLASH/MATTE TIN 80u"/Ni 40u"	1
B	CENTER PIN	COPPER ALLOY	GOLD FLASH/MATTE TIN 80u"/Ni 40u"	1
A	HOUSING	HIGH TEMP.THERMOPLASTIC	BLACK	1

深圳市华德共创科技有限公司
Shenzhen Huade co-create Technology Co.,LTD
电话：0755-27111216 传真：0755-29940187

-TOLERANCES- UNLESS OTHERWISE SPECIFIED 公差参数表							
X.X	±0.30	X.X°	±3°	APPD: 核准:	TITLE: 产品名称:	DC Power Jack 4506 大电流8A，卧式，高可靠 CL=2.05	
X.XX	±0.20	X.XX°	±2°	CHECK: 校对: 王建业	PART NO: 产品编号:	DC450060-0148-3H	
X.XXX	±0.10	X.XXX°	±1°	DRAW: 绘图: 黄艳兰	DATE: 2016-03-12	SCALE: 1:1	UNIT: mm	CODE NUMBER: A001