TOLL Plastic-Encapsulate MOSFETS

Features

- V_{DS}=40V
- I_D=680A
- $R_{DS(on)}$@V_{GS}=10V < 0.6mΩ
- $R_{DS(on)}$@V_{GS}=4.5V < 0.9mΩ
- Low Gate Charge and Rdson
- Fast Switching Speedze
- Advanced Split Gate Trench Technology

Drain-source Voltage
40 V
Drain Current
680 Ampere

Applications

- PWM Application
- Hard switched and high frequency circuits
- Power management

TOLL

Mechanical Data

- Case: TOLL
  Molding compound meets UL 94V-0 flammability rating, RoHS-compliant,halogen-free
- Terminals: Solder plated, solderable per MIL-STD-750,Method 2026

Function Diagram

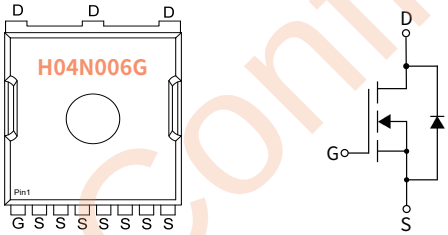

Ordering Information

PACKAGE	PACKAGE CODE	UNIT WEIGHT(g)	REEL(pcs)	BOX(pcs)	CARTON(pcs)	DELIVERY MODE
TOLL	R3	0.753	2000	4000	28000	13''

Maximum Ratings (Ta=25°C Unless otherwise specified)

PARAMETER	SYMBOL	UNIT	VALUE
Drain-source Voltage	V_{DS}	V	40
Gate-source Voltage	V_{GS}	V	±20
Drain Current	I_D	A	680
Pulsed Drain Current [1]	I_{DM}	A	2720
Total Power Dissipation	P_D	W	357
Single pulse avalanche energy[2]	EAS	mJ	1122
Junction temperature	T_J	°C	-55 ~+150
Storage temperature	T_{stg}	°C	-55 ~+150
Thermal Resistance Junction-to-Case	$R_{\theta JC}$	°C / W	0.35

HJC Confidential

Static Parameter Characteristics (Tj=25°C Unless otherwise specified)

PARAMETER	SYMBOL	Condition	UNIT	Min	Typ	Max
Drain-Source Breakdown Voltage	BV_{DSS}	V_{GS}= 0V, I_D=250μA	V	40	—	—
Zero Gate Voltage Drain Current	I_{DSS}	V_{DS}=40V, V_{GS}=0V	μA	—	—	1.0
Gate-Body Leakage Current	I_{GSS}	V_{GS}= ±20V, V_{DS}=0V	nA	—	—	±100
Gate Threshold Voltage	$V_{GS(th)}$	V_{DS}= V_{GS}, I_D=250μA	V	1.3	1.7	2.3
Static Drain-Source On-Resistance (3)	$R_{DS(ON)}$	V_{GS}= 10V, I_D=50A	mΩ	—	0.45	0.6
		V_{GS}= 4.5V, I_D=40A			0.65	0.9

Dynamic Parameters

PARAMETER	SYMBOL	Condition	UNIT	Min	Typ	Max
Input Capacitance	C_{iss}	V_{DS}=20V, V_{GS}=0V, f=1MHZ	pF	—	18921	—
Output Capacitance	C_{oss}			—	3897	—
Reverse Transfer Capacitance	C_{rss}			—	693	—

Switching Parameters

PARAMETER	SYMBOL	Condition	UNIT	Min	Typ	Max
Turn-on Delay Time	$t_{D(on)}$	V_{GS}=10V, V_{DD}=20V, I_D=80A ,R_{GEN}=1.6Ω	nS	—	26.5	—
Turn-on Rise Time	t_r		nS	—	103.8	—
Turn-off Delay Time	$t_{D(off)}$		nS	—	121	—
Turn-off fall Time	t_f		nS	—	116.6	—
Total Gate Charge	Q_g	V_{DS}=20V, I_D=80A V_{GS}=10V	nC	—	225	—
Gate-Source Charge	Q_{gs}		nC	—	46	—
Gate-Drain Charge	Q_{gd}		nC	—	37	—

Drian-Source Diode Characteristics

PARAMETER	SYMBOL	Condition	UNIT	Min	Typ	Max
Diode Forward Voltage	V_{SD}	I_S=100A, V_{GS}=0V	V	—	—	1.2
Maximum Body-Diode Continuous Current	I_S	—	A	—	—	680
Reverse Recovery Time	T_{rr}	I_S=100A, di/dt=200A/us, TJ=25°C	nS	—	82	—
Reverse Recovery Charge	Q_{rr}		nC	—	151	—

Note :
(1)Repetitive Rating: Pulse width limited by maximum junction temperature.
(2)EAS condition : Tj=25°C ,VDD=20V,VG=10V,L=0.5mH,IAS=67A,Rg=25Ω.
(3)Pulse Test: Pulse Width ≤ 300μs, Duty Cycle ≤ 2%.

HJC confidential

Ratings And Characteristics Curves (Ta=25°C Unless otherwise specified)

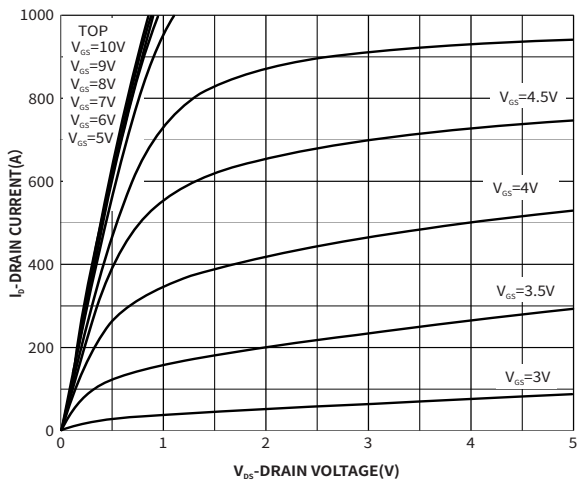

Fig.1 Output Characteristics

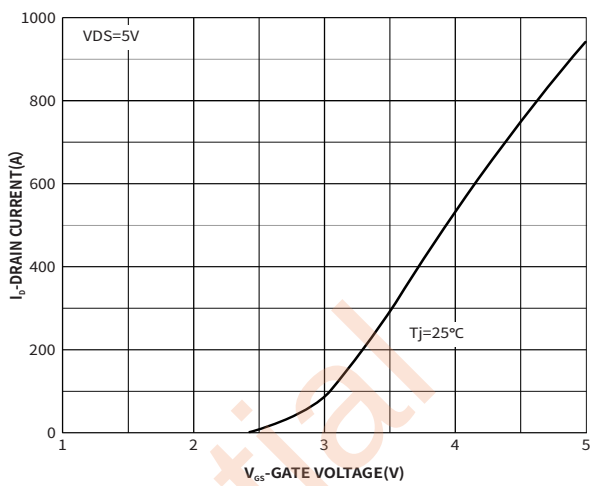

Fig.2 Transfer Characteristics

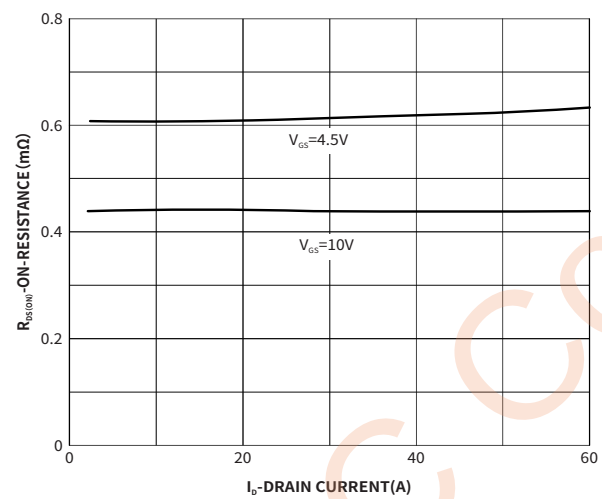

Fig.3 On-Resistance vs. Drain Current and Gate Voltage

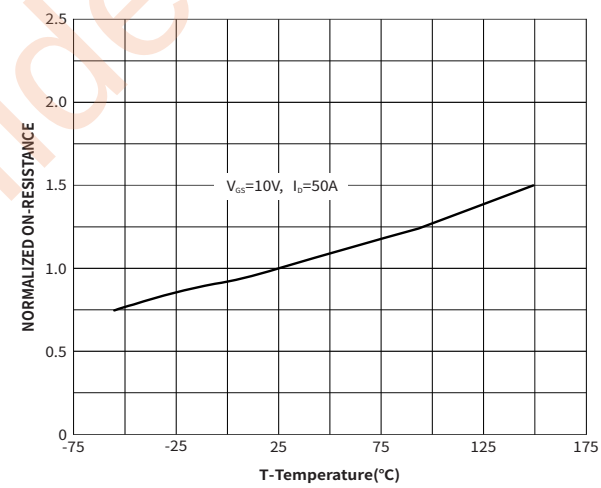

Fig.4 On-Resistance vs. Junction Temperature

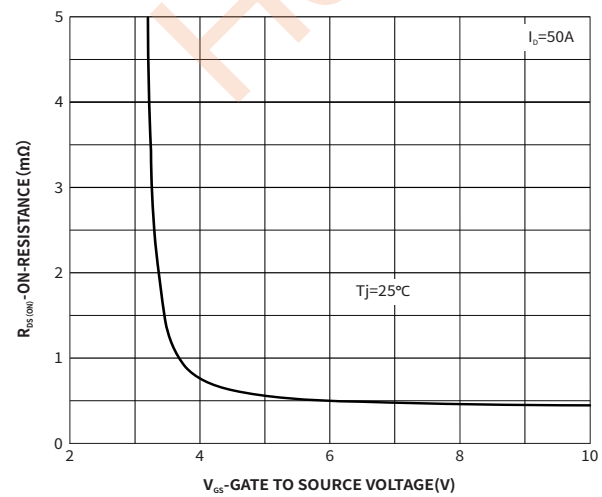

Fig.5 On-Resistance vs. Gate to Source Voltage

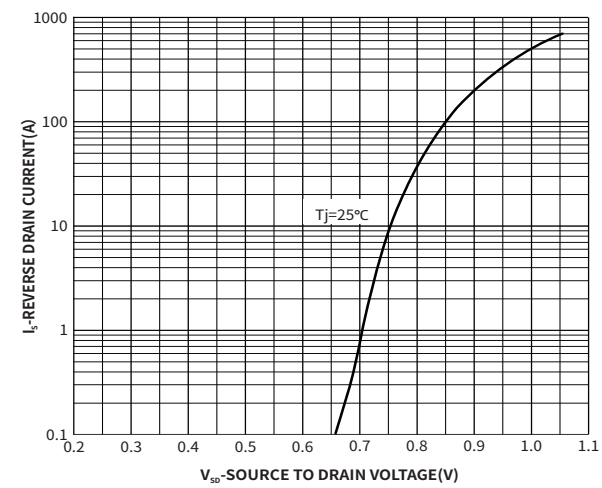

Fig.6 Typical Body-Diode Forward Characteristics

HJC Confidential

Ratings And Characteristics Curves (Ta=25°C Unless otherwise specified)

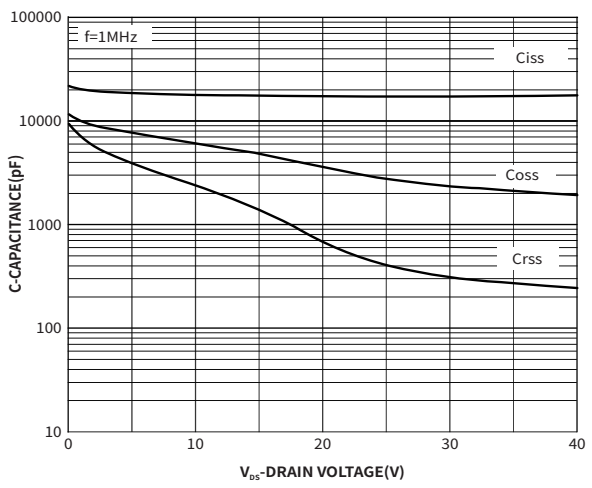

Fig.7 Capacitance Characteristics

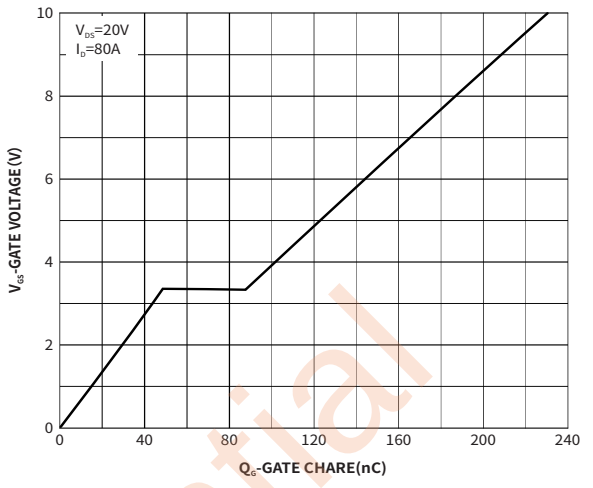

Fig.8 Gate Charge

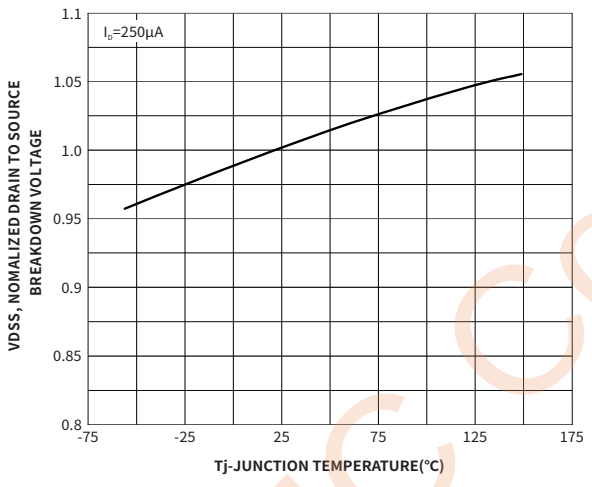

Fig.9 V(BR)DSS vs.Junction Temperature

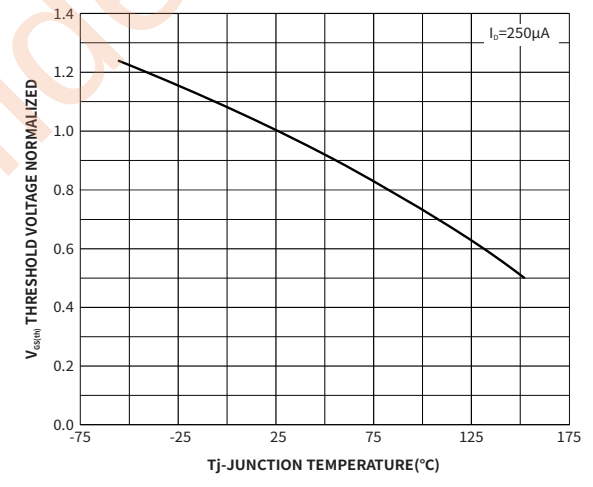

Fig.10 Gate Thresold Variation vs. Tj

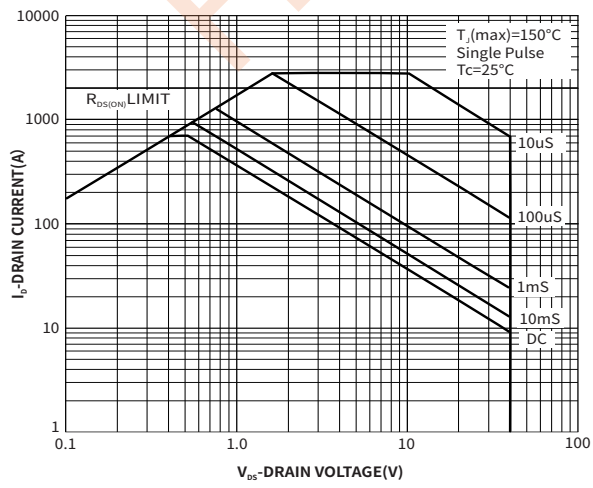

Fig.11 Safe Operation Area

HJC Confidential

Ratings And Characteristics Curves (Ta=25°C Unless otherwise specified)

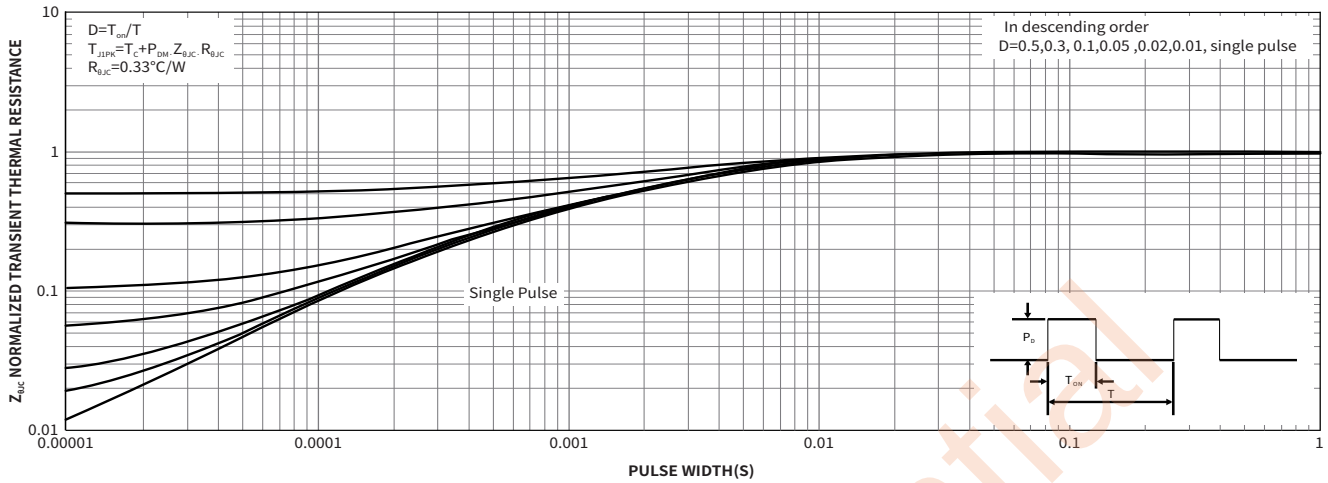

Fig.12 Normalized Maximum Transient Thermal Impedance

Package Outline Dimensions (TOLL)

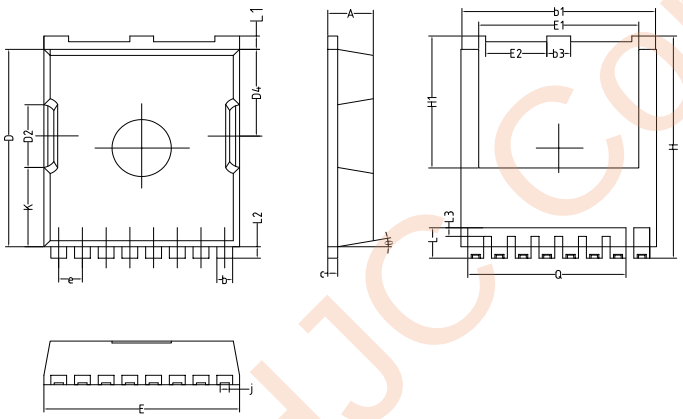

Symbol	Dimensions			
	Millimeters		Inches	
	Min.	Max.	Min.	Max.
A	2.20	2.4	0.087	0.094
b	0.65	0.90	0.026	0.035
b1	9.7	9.90	0.382	0.390
b3	1.15	1.35	0.045	0.053
c	0.40	0.60	0.016	0.024
D	10.28	10.48	0.405	0.413
D2	3.20	3.40	0.126	0.134
D4	4.45	4.65	0.175	0.183
E	9.80	10.00	0.386	0.394
E1	7.90	8.30	0.311	0.327
E2	2.8	3.20	0.110	0.126
e	1.2BSC		1.2BSC	
H	11.48	11.88	0.452	0.468
H1	6.95REF		6.95REF	
j	0.35REF		0.35REF	
K	3.0REF		3.0REF	
L	1.35	1.75	0.053	0.069
L1	0.50	0.90	0.020	0.035
L2	0.50	0.70	0.020	0.028
L3	0.25	0.65	0.010	0.026
Q	8.0REF		8.0REF	
θ	10° REF		10° REF	

Suggested Pad Layout

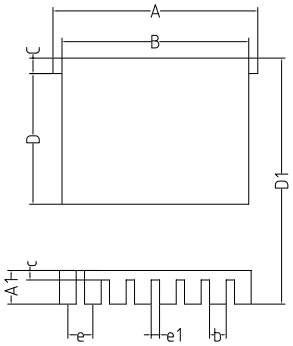

Symbol	Dimensions			
	Millimeters		Inches	
	Min.	Max.	Min.	Max.
A	9.95	10.2	0.392	0.402
A1	2.60	2.80	0.102	0.110
B	8.2	8.3	0.323	0.327
b	0.6	0.8	0.024	0.031
C	0.9	1.1	0.035	0.043
c	0.6	0.8	0.024	0.031
D	6.7	6.9	0.264	0.272
D1	13.1	13.3	0.516	0.524
e	1.0	1.2	0.039	0.047
e1	0.2	0.4	0.008	0.016

HJC confidential

1.Gate Charge Test Circuit & Waveforms

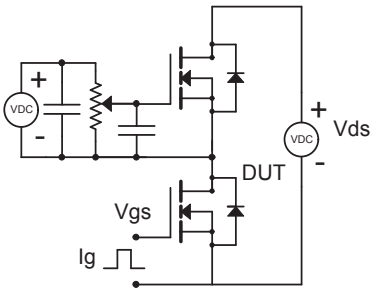

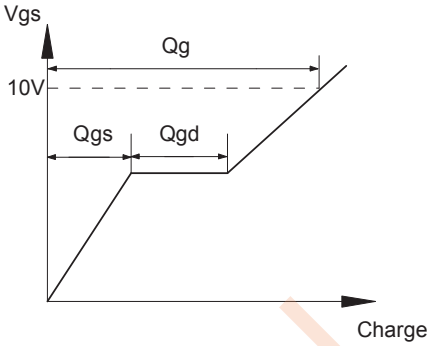

2. Resistive Switching Test Circuit & Waveforms

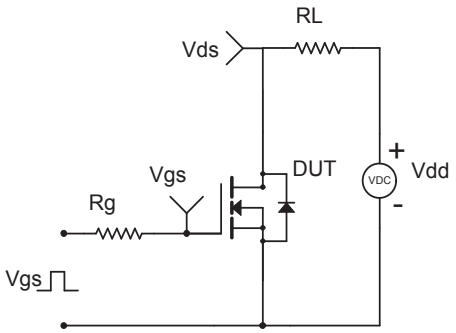

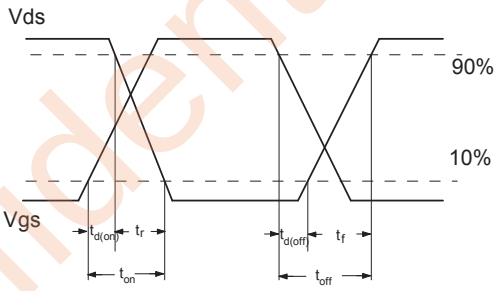

3.Unclamped Inductive Switching (UIS) Test Circuit & Waveforms

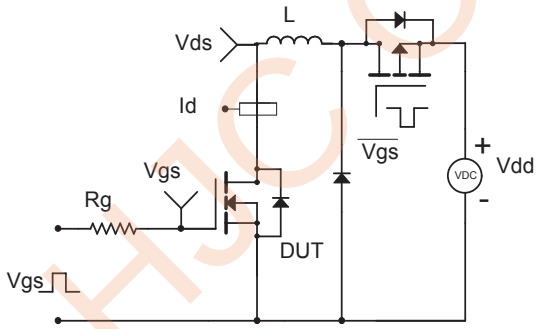

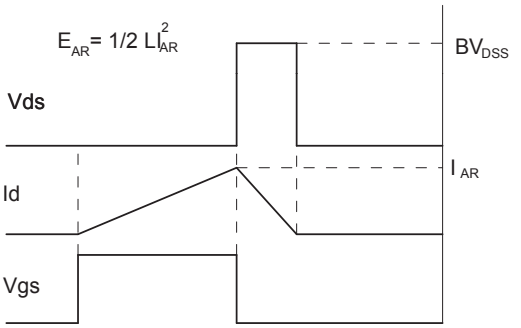

4.Diode Recovery Test Circuit & Waveforms

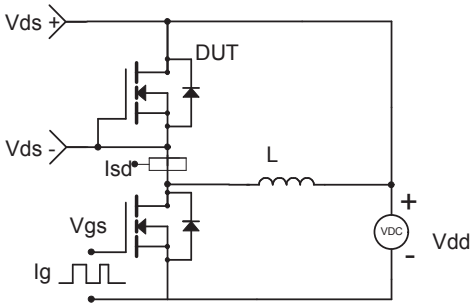

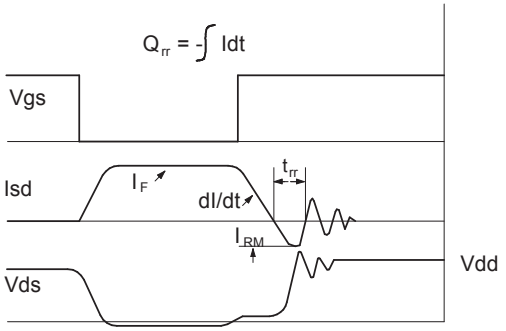

HJC confidential