REV.	ECN NO.	MODIFIED MARK	APPROVED
B	———	FIRST RELEASE	

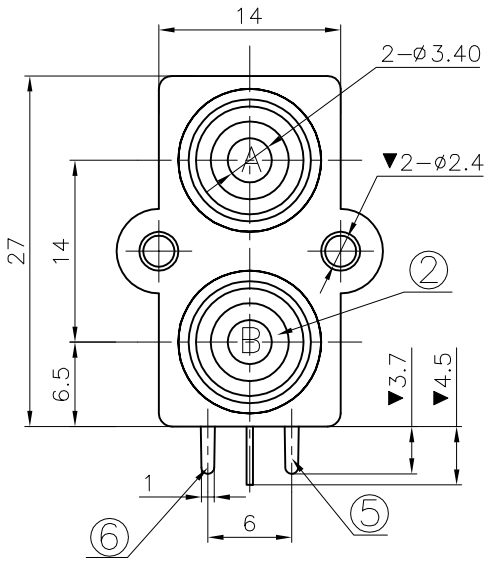

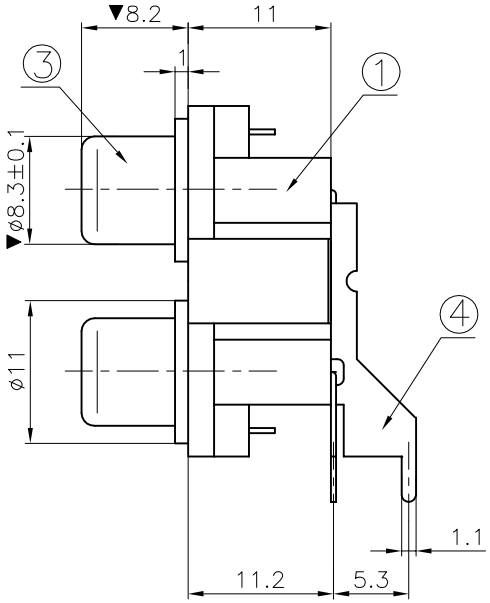

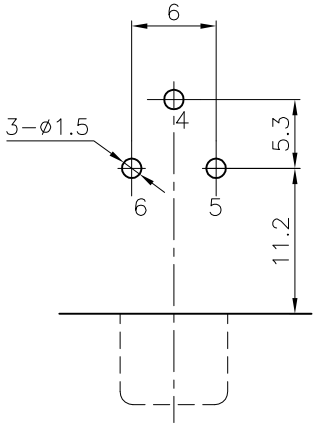

PCB LYAOUT

TOP VIEW

GAUGE PLUG:

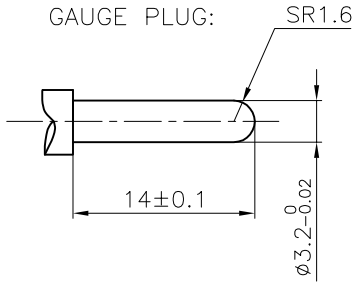

COLOR TABLE

CODE	A	B
COLOR	WHITE	RED

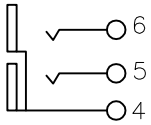

SCHEMATIC

NOTES:
ELECTRICAL:
1:RATED CURRENT: 1A Max.
2:RATED VOLTAGE: 12V DC.
3:CONTACT RESISTANCE: 30 MILLIOHMS Max.
AFTER TESTING:100 MILLIOHMS Max.
4:INSULATION RESISTANCE: 100 MEGAOHMS Min.
5:DIELECTRIC WITHSTANDING VOLTAGE: 500 VAC Min.
MECHANICAL:
1:INSERTION FORCE: 3N−30N.
2:WITHDRAWAL FORCE: 3N−30N.
3:DURRABILITY: 500 CYCLES.
ENVIRONMENTAL:
TEMPERATURE RANGE: −20°C TO 60°C.
MARK"▼"AS THE KEY CONTROL SIZE.
PIN POSITION AND SIZE OK IF FIT PCB BOARD

NO.	PART NAME	Q'TY	MATERIAL	FINISH/COLOR	REMARK
⑥	TERMINAL−C	1	BRASS t=0.35	CuSn PLATED	RoHS 2.0
⑤	TERMINAL−B	1	BRASS t=0.35	CuSn PLATED	
④	TERMINAL−A	1	BRASS t=0.4	CuSn PLATED	
③	SOCKET	2	BRASS t=0.36	CuSn PLATED	
②	WASHER	2	PBT	SEE COLOR TABLE	
①	HOUSE	1	ABS	BLACK	

ANGLE	±5°
63 < L	±0.5
16 < L ≤ 63	±0.4
4 < L ≤ 16	±0.3
L ≤ 4	±0.2

TOL TABLE:

MODEL NAME: (PART NO.) AV-207-WR-BK

浙江创都电子科技有限公司

MAT'L: See table	DESIGN:	12/01'23	TITLE: RCA PIN JACK		
FINISH: See table	CHECKED:	12/01'23	DWG NO.: CAX-AV-207-WR-PHP		REV.: B
Q'TY:/	APPROVED:	12/01'23	UNIT: mm	VIEW:	SCALE: 5:1 / SHEET: 1/1 / SIZE: A3