PROPRIETARY INFORMATION
COMPANY CONFIDENTIAL

REV.	ECN NO.	DESCRIPTION	DESIGN	DATE
A	XXXXXXX	INITIAL	Kai	2018.05.08
A	XXXXXXX	新增产品料号	Liu	2024.04.10

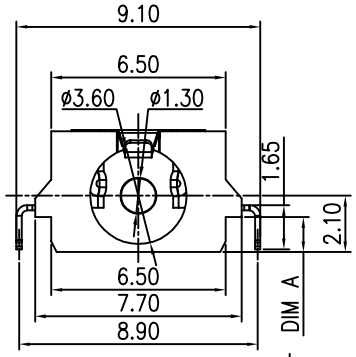

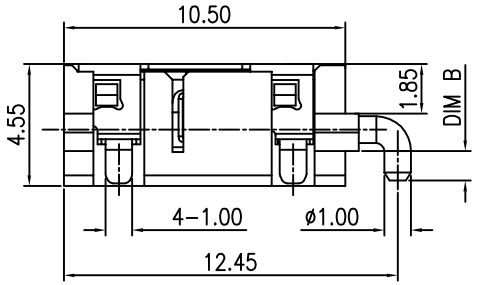

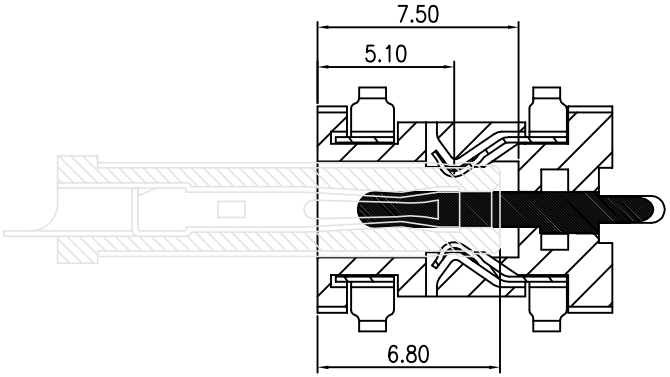

DC JACK INSERT DEPTH

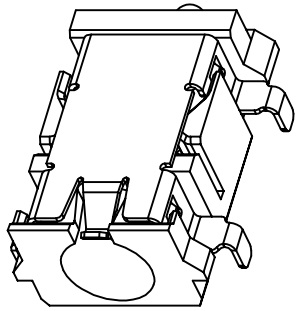

3D VIEW

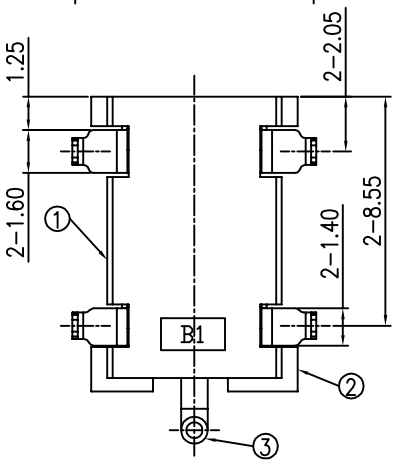

料号说明:

序号	产品料号	DIM A	DIM B
1	DC-0055-1.3-A	0.80	1.10
2	DC-0055-1.3-B	1.30	1.10
3	DC-0055-1.3-C	1.50	1.30

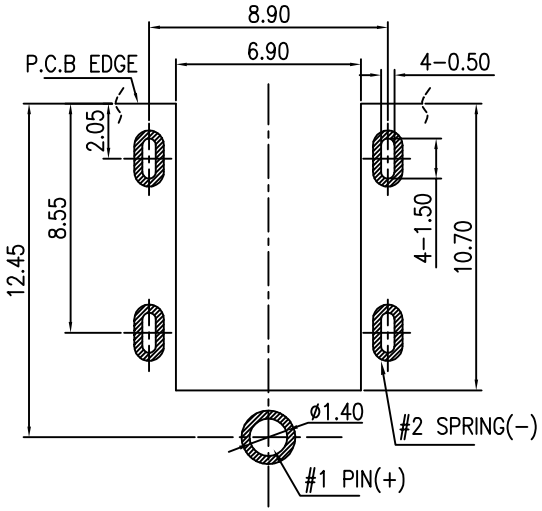

RECOMMENDED PCB LAYOUT
TOP VIEW (TOLERANCE:±0.05)

SPECIFICATIONS:

1. ELECTRICAL CHARACTERISTICS:
   1-1. RATING: 24V 3A
   1-2. CONTACT RESISTANCE: 50mΩ MAX.(INITIAL)
   1-3. DIELECTRIC WITHSTANDING VOLTAGE: 500V AC FOR ONE MINUTE
   1-4. INSULATION RESISTANCE: 100MΩ MIN. MEASURED BY 500V DC
2. MECHANICAL CHARACTERISTICS:
   2-1. INSERTION FORCE : 0.3~3.0 KGF
   2-2. WITHDRAWAL FORCE : 0.3~3.0 KGF
3. LIFE TEST: 5,000 CYCLES MIN.

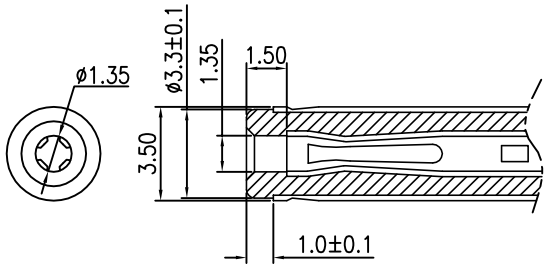

MATE PLUG

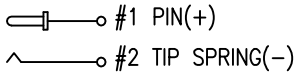

ELECTRICAL CIRCUIT

NO.	DESCRIPTION	QTY	MATERIAL	PLATING & COLOR
③	CENTER PIN	1	BRASS ø1.3	Au
②	TERMINAL	1	PHOSPHOR BRONZE 0.2t	Au
①	HOUSING	1	PPA	Blac

UNLESS OTHERWISE SPECIFED TOLERANCES

DECIMALS: DIM	TOL	ANGLES: DIM	TOL
X.	±0.50	X.	±2°
X.X	±0.30	X.X	±1°
X.XX	±0.20	X.XX	
X.XXX	±0.10	X.XXX	

浙江创都电子科技有限公司

DWG NO.
DESIGN:
CHECK:
APPROVED

PART NAME: DC POWER JACK
PART NO. CAX-DC-0055-3A-1.3-AU-CB-XL
REV. A | UNIT: mm | SHEET: 1/1