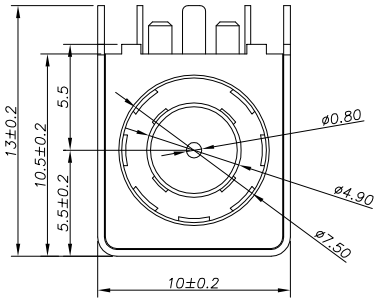

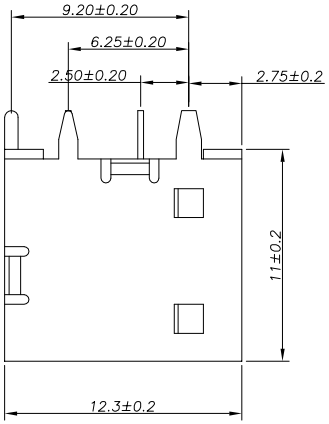

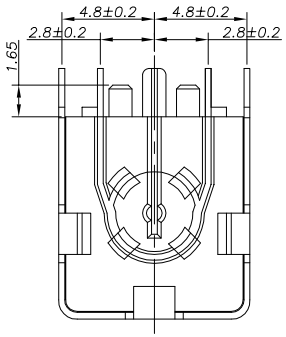

ELECTRICAL
VOLTAGE RATING:20V DC (R.M.S)
CURRENT RATING:18.0A
CONTACT RESISTANCE:30mΩ MAX.
INSULATION RESISTANCE:100 MΩ MIN.
DIELECTRIC WITHSTAND VOLTAGE:500V AC (R.A.M)
INSERTION AND EXTRACTION FORCE: 3–30N;
LIFE TEST: 5,000 CYCLES MIN.
TEMPERATRUE RANGE:–40°C TO +85°C
SALT SPRAY TEST MEETS 24 HOURS

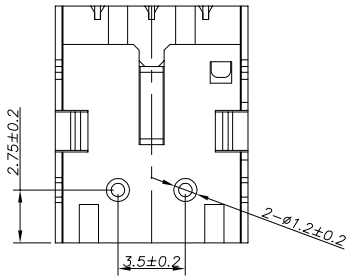

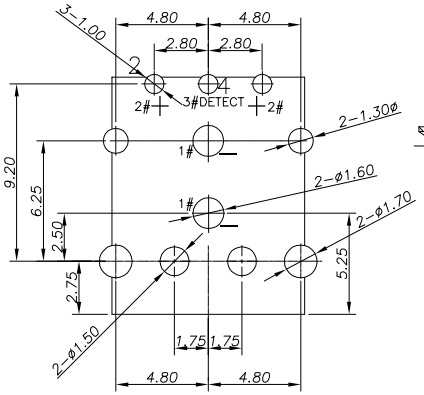

P.C.B LAYOUT TOP VIEW

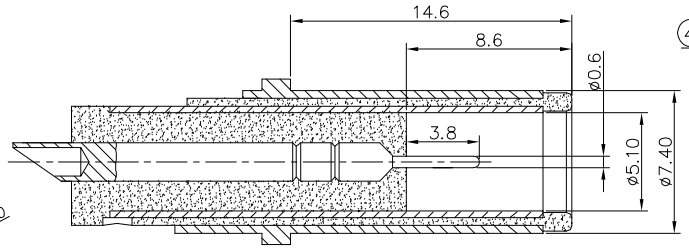

(TOLERANCE ±0.05)

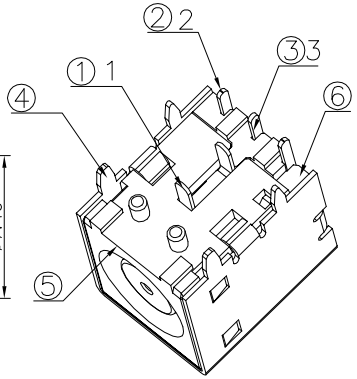

SCHEMATIC

DC-093	DC-093A
2(+) 3(DETECT) 1(-)	2(+) 1(-)

NO.	PART NAME	Q'TY	MATERIAL	FINISH	REMARK
⑥	COVER	1	LCP UL–94V–0		BLACK
⑤	HOUSING	1	LCP UL–94V–0		BLACK
④	SHELL	1	C2680	Ni–PLATED	
③	3# TERMINAL(DETECT)	1	C5191	Au–PLATED	
②	2# TERMINAL(+)	1	C5191	Ag–PLATED	
①	1# TERMINAL(–)	1	C5191	Ag–PLATED	

ECN NO	REV	DATE	DESCRIPTION	CHANGE.	CHECK.	APPRO.
—	A/0		NEW	—	—	—

UNSPECIFIED TOLERANCE	
ANGLE	±2°
30 ~	±0.30
10 ~ 30	±0.20
~ 10	±0.15

Designed:
Checked:
Approved:
Date: 2014/03/14

MODEL TYPE: DC JACK

浙江创都电子科技有限公司

PART NO. CAX-DC-093-9P-0.8-18A-AU-XL

UNIT:	SCALE:	VIEW:	Edition:
mm	1:1		A/0