REV.	ECN NO.	MODIFIED MARK	APPROVED
B	———	FIRST RELEASE	

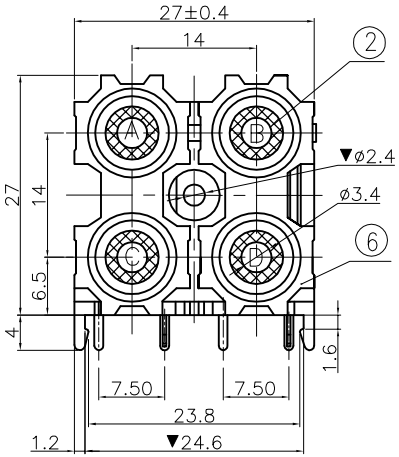

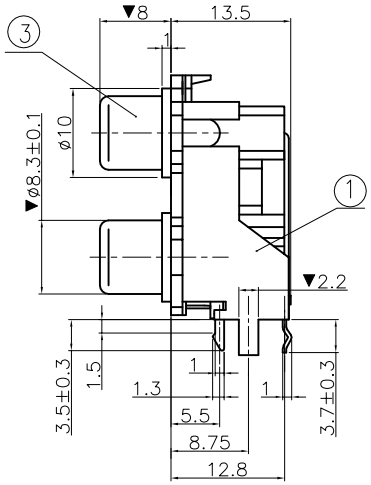

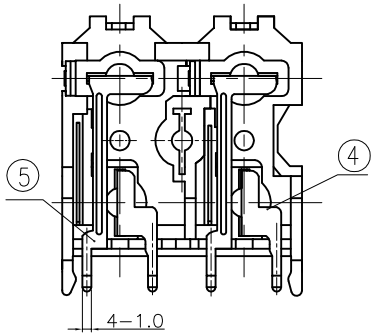

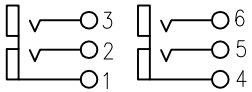

SCHEMATIC

COLOR TABLE

CODE	A	B
COLOR	WHITE	WHITE
CODE	C	D
COLOR	RED	RED

GAUGE PLUG:

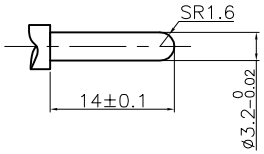

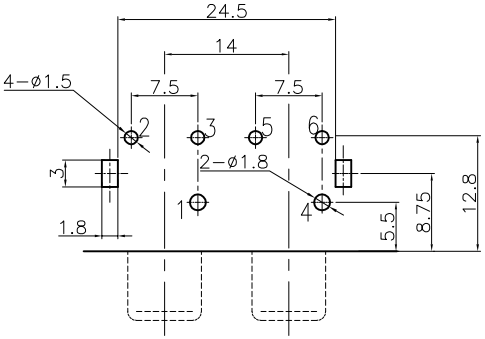

PCB LAYOUT
TOP VIEW

NOTES:
ELECTRICAL:
1:RATED CURRENT: 1A Max.
2:RATED VOLTAGE: 12V DC.
3:CONTACT RESISTANCE: 30 MILLIOHMS Max.
AFTER TESTING:100 MILLIOHMS Max.
4:INSULATION RESISTANCE: 100 MEGAOHMS Min.
5:DIELECTRIC WITHSTANDING VOLTAGE: 500 VAC Min.
MECHANICAL:
1:INSERTION FORCE: 3N−30N.
2:WITHDRAWAL FORCE: 3N−30N.
3:DURRABILITY: 500 CYCLES.
ENVIRONMENTAL:
TEMPERATURE RANGE: −20°C TO 60°C.
MARK **"▼"** AS THE KEY CONTROL SIZE.
PIN PIN POSITION SIZE IS SUBJECT TO PCB BOARD.

NO.	PART NAME	Q'TY	MATERIAL	FINISH/COLOR	REMARK
⑥	COVER	2	ABS	BLACK	RoHS 2.0
⑤	TERMINAL−B	2	BRASS t=0.35	CuSn PLATED	
④	TERMINAL−A	2	BRASS t=0.35	CuSn PLATED	
③	SOCKET	2	BRASS t=0.36	CuSn PLATED	
②	WASHER	4	PBT	SEE COLOR TABLE	
①	HOUSE	1	PBT	BLACK	

ANGLE	±5°
63 < L	±0.5
16 < L ≤ 63	±0.4
4 < L ≤ 16	±0.3
L ≤ 4	±0.2

TOL TABLE:

MODEL NAME: (PART NO.) AV-413-WR-BK

浙江创都电子科技有限公司

MAT'L: See table	DESIGN:	06/25'24	TITLE: RCA PIN JACK		
FINISH: See table	CHECKED:	06/25'24	DWG NO.: CAX-AV-413-WR-BK-PHP		REV.: B
Q'TY:/	APPROVED:	06/25'24	UNIT: mm	VIEW:	SCALE: 5:1 / SHEET: 1/1 / SIZE: A3