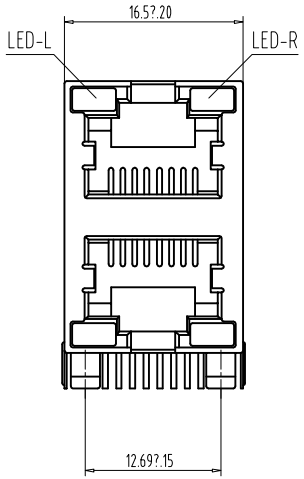

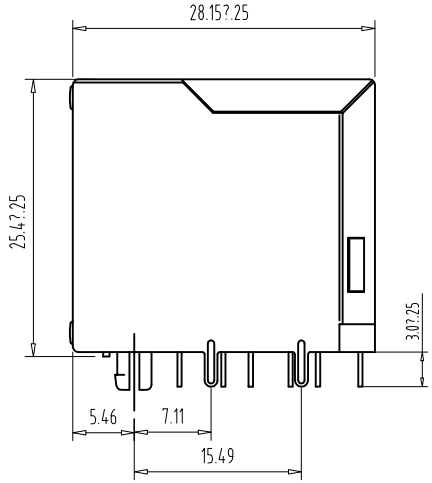

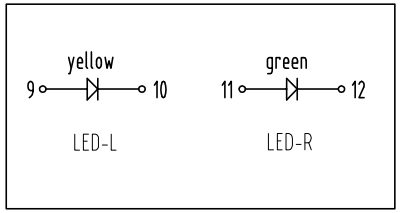

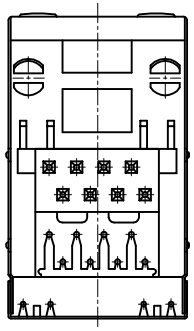

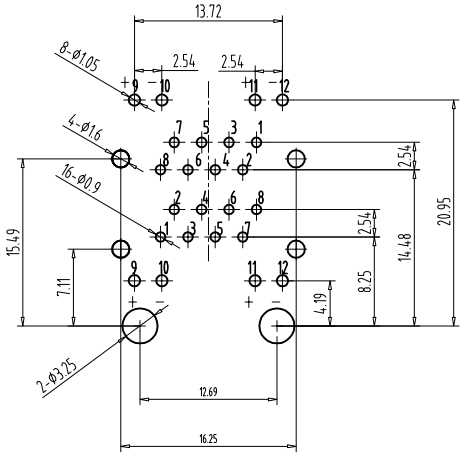

PC Board Layout

Component Side Shown

NOTES:

MATERIAL:

1.HOUSING MATERIAL	:GLASS FILLED POLYESTER UL94V-0.
2.CONTACT MATERIAL	:PHOSPHOR BRONZE Ø0.46mm.
3.PLATING	:GOLD PLATING OVER NICKEL.
4.LED	:OPTION

ELECTRICAL:

1.VOLTAGE RATING	:125 VAC RMS.
2.CURRENT RATING	:1.5 AMP.
3.CONTACT RESISTANCE	:30 MILLIOHMS MAX.
4.INSULATION RESISTANCE	:500 MEGOHMS MIN @ 500V DC .
5.DIELECTRIC WITHSTANDING RESISTANCE	:1000V AC RMS 50Hz. 1MIN.

MECHANICAL:

1. DURRABILITY	:750 CYCLES MIN.
2.PCB RETENTION PRE-SOLDER	:1 LB MIN.

ENVIRONMENTAL:

1. STORAGE	: -40℃~+85℃
2. OPERATION	: 0? TO 70?.

深圳市华宇创精密电子有限公司

TOLERANCE: X.X ±0.30 X.XX ±0.25 X.XXX ±0.15 X.° ±2° X.X° ±0.5°	DRAWED BY : 陈一鸣	DATE : 2014-02-23	PART NAME: RJ45 90 ° DIP 双层带灯
	CHECKED BY: 马跃	DATE : 2014-02-23	PART NO. HYCW383-RJ45-281B
UNIT: mm [inch]			MOLD NO.
	APPROVED BY: 邱敏	DATE : 2014-02-23	DRAW NO: HYC-2203031904
SCALE:1:1	SIZE: A4		SHEET NO. 1 OF 1