REV.	DESCRIPTION	ECN NO.	NAME	DATE

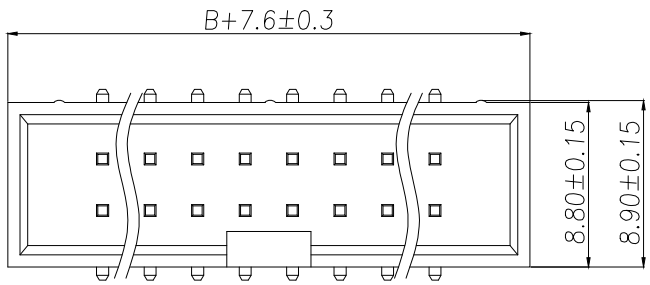

SPECIFICATIONS

Current Rating: 3Amps
Insulation Resistance: 1000MΩ Min
Contact Resistance: 20mΩ Max
Withstanding Voltage: AC 1000V
Operation Temperature: −40°to+105°
Contact Material: Brass
Insrlator Material: Polyester(UL 94V−0)
Contact plating: Gold Flash
Standard: PA6T
Max.Processing Temp: 240°C for30−60seconds
(260°Cfor10seconds)

P/N	PIN	DIM.A	DIM.B
IDC2.54−2−03−W	2*3	5.08	7.62
IDC2.54−2−04−W	2*4	7.62	10.16
IDC2.54−2−05−W	2*5	10.16	12.70
IDC2.54−2−06−W	2*6	12.70	15.24
IDC2.54−2−07−W	2*7	15.24	17.78
IDC2.54−2−08−W	2*8	17.78	20.32
IDC2.54−2−09−W	2*9	20.32	22.86
IDC2.54−2−10−W	2*10	22.86	25.40
IDC2.54−2−12−W	2*12	27.94	30.48
IDC2.54−2−13−W	2*13	30.48	33.02
IDC2.54−2−14−W	2*14	33.02	35.56
IDC2.54−2−15−W	2*15	35.56	38.10
IDC2.54−2−16−W	2*16	38.10	40.64
IDC2.54−2−17−W	2*17	40.64	43.18
IDC2.54−2−18−W	2*18	43.18	45.72
IDC2.54−2−20−W	2*20	48.26	50.80
IDC2.54−2−22−W	2*22	53.34	55.88
IDC2.54−2−25−W	2*25	60.96	63.50
IDC2.54−2−30−W	2*30	73.66	76.20
IDC2.54−2−32−W	2*32	78.74	81.28

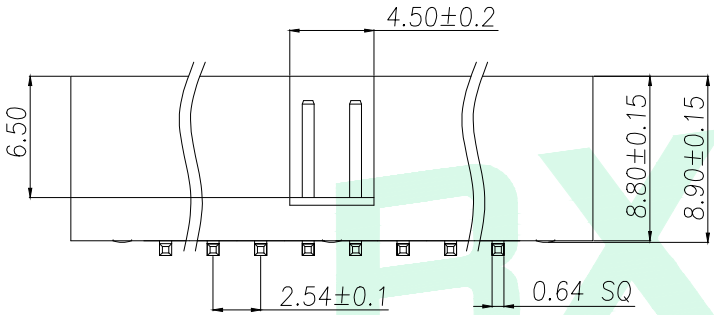

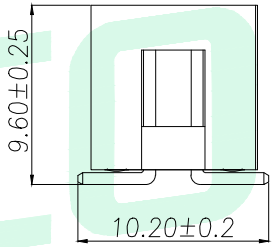

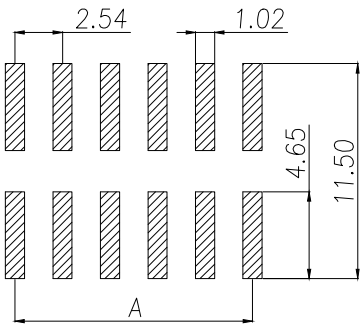

RECOMMEND P.C.B LAYOUT

PCB TOLERANCE:±0.05 (TOP VIEW)

GENERAL TOLERANCE					
DIM.	TOL.				
x.	±0.30				
x.x	±0.20				
x.xx	±0.10				
GENERAL	ANGLE:				
x.°	±5°				
x.x°	±1°				
x.xx°	±0.5°				

DONGGUAN BAOXUN PRECISION TECHNOLOGY CO., LTD

BXCONN®

TITLE: 2.54DC3−NPin H8.9 SMT PC10.2 PB9.6 L11.5 6T

DWG. NO.: IDC2.54−2−N−W

CHECKED: MAX

PART NO.: IDC2.54−2−N−W

DRAWN: ELLA

UNIT:	SCALE:	SHEET:	DWG. SIZE:	LAYER:
mm	none	1of 1	A4	bxconn

APPROVED: WILL