TRACO POWER

Unregulated DC/DC Converter

TSM Series, 1 Watt

- **SMD package (SOIC-8/10)**
- **Construction in lead frame technology**
- **I/O isolation 1000 VDC**
- **Efficiency up to 82 %**
- **Operating temperature −40°C to +85°C**
- **Reflow solder temperature up to 245°C**
- **High accuracy of Pin coplanarity**
- **Available in tape and reel package**
- **3-year product warranty**

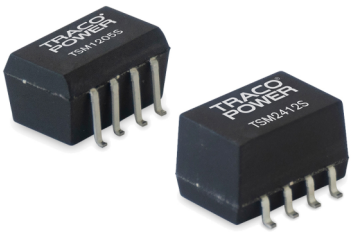

The TSM series are isolated DC/DC converters with 1W output power implemented in a molded plastic package with a pin accuracy suitable for automated SMD-production. The devices can be soldered without any problems in a high temperature lead free solder process. With their small footprint these converters are the economical solution for point of load power conversion, ground loop elimination, noise reduction and digital interface applications.

Models

Order Code	Input Voltage Range	Output 1 Vnom	Output 1 Imax	Output 2 Vnom	Output 2 Imax	Efficiency typ.
TSM 0505S	4.5 - 5.5 VDC (5 VDC nom.)	5 VDC	200 mA			80 %
TSM 0509S		9 VDC	110 mA			78 %
TSM 0512S		12 VDC	84 mA			80 %
TSM 0515S		15 VDC	67 mA			81 %
TSM 0505D		+5 VDC	100 mA	−5 VDC	100 mA	75 %
TSM 0512D		+12 VDC	42 mA	−12 VDC	42 mA	79 %
TSM 0515D		+15 VDC	33 mA	−15 VDC	33 mA	79 %
TSM 1205S	10.8 - 13.2 VDC (12 VDC nom.)	5 VDC	200 mA			81 %
TSM 1209S		9 VDC	110 mA			78 %
TSM 1212S		12 VDC	84 mA			81 %
TSM 1215S		15 VDC	67 mA			82 %
TSM 1205D		+5 VDC	100 mA	−5 VDC	100 mA	75 %
TSM 1212D		+12 VDC	42 mA	−12 VDC	42 mA	80 %
TSM 1215D		+15 VDC	33 mA	−15 VDC	33 mA	80 %
TSM 2405S	21.6 - 26.4 VDC (24 VDC nom.)	5 VDC	200 mA			79 %
TSM 2409S		9 VDC	110 mA			77 %
TSM 2412S		12 VDC	84 mA			80 %
TSM 2415S		15 VDC	67 mA			80 %
TSM 2405D		+5 VDC	100 mA	−5 VDC	100 mA	74 %
TSM 2412D		+12 VDC	42 mA	−12 VDC	42 mA	79 %
TSM 2415D		+15 VDC	33 mA	−15 VDC	33 mA	79 %

Input Specifications

Input Current	- At no load	5 Vin models:	**30 mA typ.**
		12 Vin models:	**15 mA typ.**
		24 Vin models:	**8 mA typ.**
	- At full load	5 Vin models:	**250 mA typ.** (5 Vout model)
			254 mA typ. (9 Vout model)
			252 mA typ. (12 Vout model)
			248 mA typ. (15 Vout model)
			267 mA typ. (5 / -5 Vout model)
			255 mA typ. (12 / -12 Vout model)
			251 mA typ. (15 / -15 Vout model)
		12 Vin models:	**103 mA typ.** (5 Vout model)
			106 mA typ. (9 Vout model)
			104 mA typ. (12 Vout model)
			102 mA typ. (15 Vout model)
			111 mA typ. (5 / -5 Vout model)
			105 mA typ. (12 / -12 Vout model)
			103 mA typ. (15 / -15 Vout model)
		24 Vin models:	**53 mA typ.** (5 Vout model)
			54 mA typ. (9 Vout model)
			53 mA typ. (12 Vout model)
			52 mA typ. (15 Vout model)
			56 mA typ. (5 / -5 Vout model)
			53 mA typ. (12 / -12 Vout model)
			52 mA typ. (15 / -15 Vout model)
Surge Voltage		5 Vin models:	**9 VDC max.** (1 s max.)
		12 Vin models:	**18 VDC max.** (1 s max.)
		24 Vin models:	**30 VDC max.** (1 s max.)
Recommended Input Fuse		5 Vin models:	**500 mA** (slow blow)
		12 Vin models:	**200 mA** (slow blow)
		24 Vin models:	**100 mA** (slow blow)
			(The need of an external fuse has to be assessed in the final application.)
Input Filter			Internal Capacitor

Output Specifications

Voltage Set Accuracy			±3% max.
Regulation (Unregulated)	- Input Variation (1% Vin step)	single output models:	1.5% max.
		dual output models:	1.5% max.
	- Load Variation	See application note:	www.tracopower.com/tsm-cc
	- Voltage Balance (symmetrical load)	dual output models:	1% max.
Ripple and Noise	- 20 MHz Bandwidth		120 mVp-p max.
			(To further reduce Ripple and Noise, a capacitor with 0.47 µF X7R is recommended.)
Capacitive Load			33 µF max.
Minimum Load		See application note:	www.tracopower.com/tsm-cc
			(Operation at lower load will not damage the converter, but it may not meet all specifications)
Temperature Coefficient			±0.02 %/K max.
Start-up Time			280 ms max.
Short Circuit Protection			Limited 0.5 s max., Automatic recovery

Safety Specifications

Over Voltage Category	Not mains connected

All specifications valid at nominal voltage, resistive full load and +25°C after warm-up time, unless otherwise stated.

General Specifications

Relative Humidity		95% max. (non condensing)
Temperature Ranges	- Operating Temperature	−40°C to +85°C
	- Case Temperature	+105°C max.
	- Storage Temperature	−50°C to +125°C
Power Derating	- High Temperature	2.5 %/K above 65°C (24 Vin models)
		4.0 %/K above 80°C (other models)
	See application note:	www.tracopower.com/tsm-cc
Cooling System		Natural convection (20 LFM)
Regulator Topology		Push-Pull Converter
Switching Frequency		50 - 140 kHz (PFM)
		100 kHz typ. (PFM)
Insulation System		Functional Insulation
Isolation Test Voltage	- Input to Output, 60 s	1'000 VDC
	- Input to Output, 1 s	1'200 VDC
Isolation Resistance	- Input to Output, 500 VDC	1'000 MΩ min.
Isolation Capacitance	- Input to Output, 100 kHz, 1 V	40 pF typ.
		100 pF max.
Reliability	- Calculated MTBF	2'000'000 h (MIL-HDBK-217F, ground benign)
Moisture Sensitivity (MSL)		Level 3 (J-STD-033C)
Washing Process		According to Cleaning Guideline
		www.tracopower.com/info/cleaning.pdf
Housing Material		Epoxy (UL 94 V-0 rated)
Potting Material		Overmold Compound
Pin Material		Nickel-Iron (Alloy 42)
Pin Foundation Plating		Nickel (2.5 - 3 µm)
Pin Surface Plating		Tin (10 - 15 µm), matte
Housing Type		Overmold
Mounting Type		PCB Mount
Connection Type		SMD (Surface-Mount Device)
Footprint Type		SMD8 (single output models)
		SMD10 (dual output models)
Soldering Profile		Lead-Free Reflow Soldering (acc. J-STD-020E)
		245°C max. (Tp)
		10 s max. (tp, at Tp - 5°C)
	See application note:	www.tracopower.com/info/reflow-soldering.pdf

All specifications valid at nominal voltage, resistive full load and +25°C after warm-up time, unless otherwise stated.

Weight	- 5 Vin input	5 Vout models:	1.5 g
		9 Vout models:	1.5 g
		12 Vout models:	1.5 g
		15 Vout models:	1.5 g
	- 12 Vin input	5 Vout models:	1.5 g
		9 Vout models:	1.5 g
		12 Vout models:	1.5 g
		15 Vout models:	1.5 g
	- 24 Vin input	5 Vout models:	1.8 g
		9 Vout models:	1.8 g
		12 Vout models:	1.8 g
		15 Vout models:	1.8 g
	- 5 Vin input	5 / -5 Vout models:	1.8 g
		12 / -12 Vout models:	1.8 g
		15 / -15 Vout models:	1.8 g
	- 12 Vin input	5 / -5 Vout models:	1.8 g
		12 / -12 Vout models:	1.8 g
		15 / -15 Vout models:	1.8 g
	- 24 Vin input	5 / -5 Vout models:	2.2 g
		12 / -12 Vout models:	2.2 g
		15 / -15 Vout models:	2.2 g
Thermal Impedance	- Case to Ambient		67.6 K/W typ.
Environmental Compliance	- REACH Declaration		www.tracopower.com/info/reach-declaration.pdf
			REACH SVHC list compliant
			REACH Annex XVII compliant
	- RoHS Declaration		www.tracopower.com/info/rohs-declaration.pdf
			Exemptions: No Exemptions

Additional Information

Supporting Documents	www.tracopower.com/overview/tsm
Frequently Asked Questions	www.tracopower.com/glossary-faq
Glossary	www.tracopower.com/info/glossary.pdf

All specifications valid at nominal voltage, resistive full load and +25°C after warm-up time, unless otherwise stated.

Outline Dimensions

Single Output Models

5 Vin & 12 Vin Models

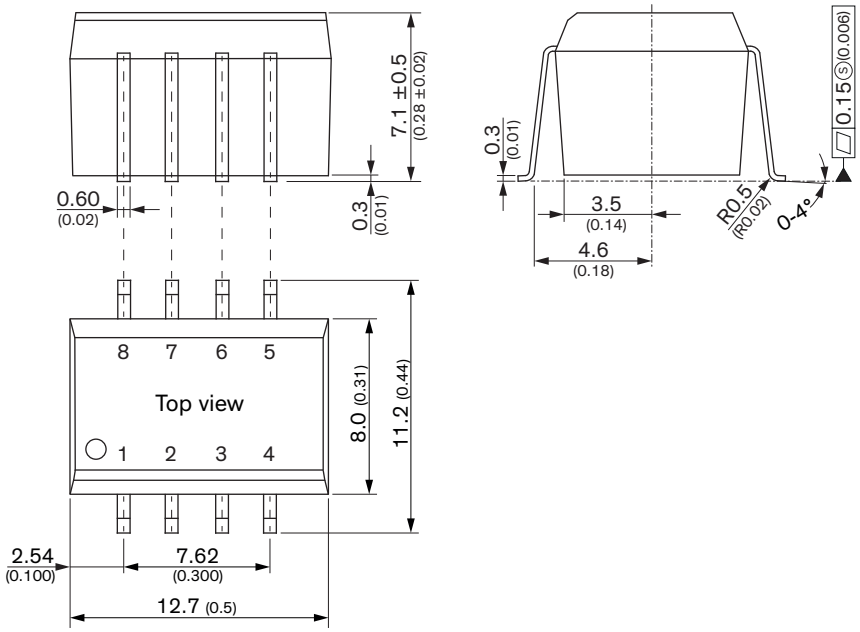

Pinout	
Pin	**Function**
1	–Vin (GND)
2	+Vin (Vcc)
3	NTC
4	–Vout
5	+Vout
6	NTC
7	NTC
8	NTC

NTC: Not to connect

24 Vin Models

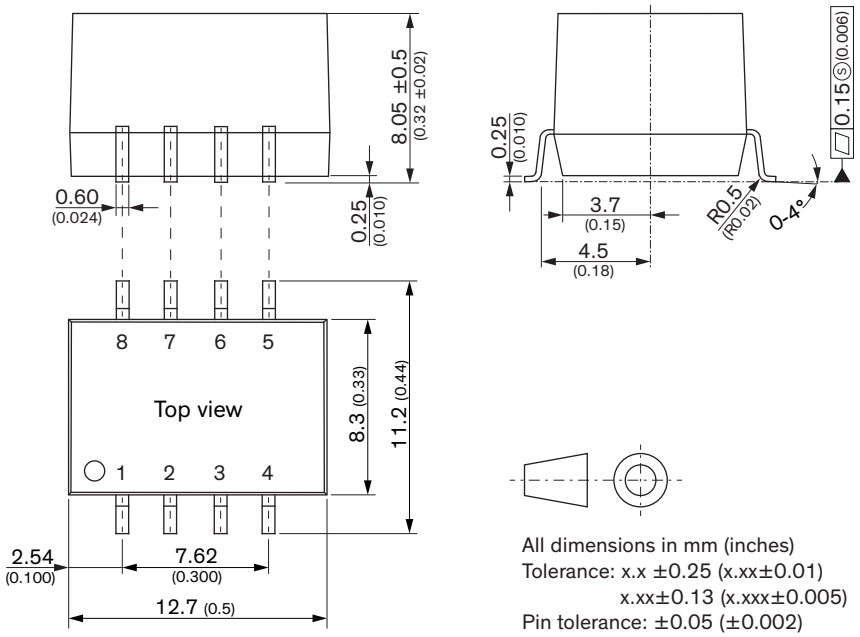

All dimensions in mm (inches)
Tolerance: x.x ±0.25 (x.xx±0.01)
x.xx±0.13 (x.xxx±0.005)
Pin tolerance: ±0.05 (±0.002)

All specifications valid at nominal voltage, resistive full load and +25°C after warm-up time, unless otherwise stated.

Dual Output Models

5 Vin & 12 Vin Models

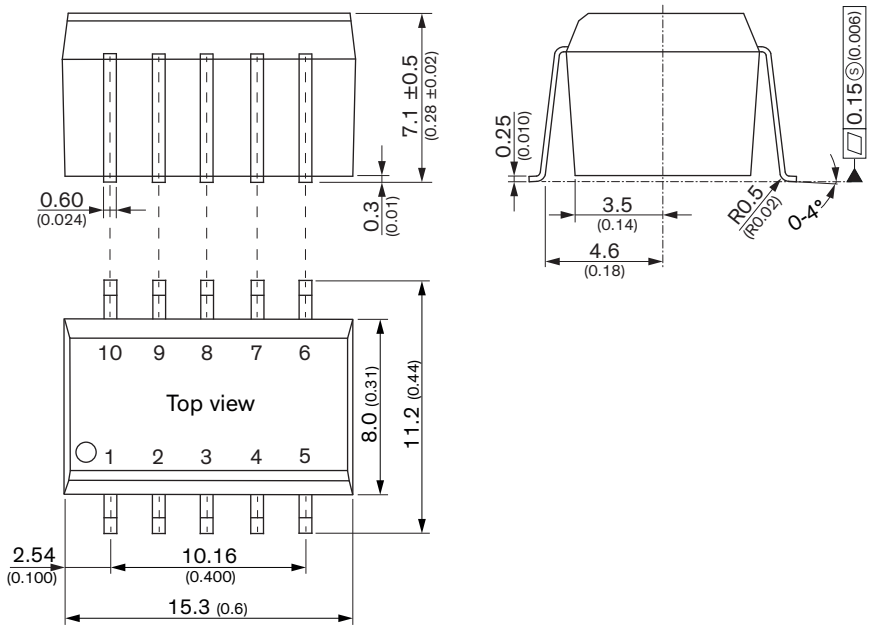

Pinout	
Pin	**Function**
1	–Vin (GND)
2	+Vin (Vcc)
3	NTC
4	Common
5	–Vout
6	NTC
7	+Vout
8	NTC
9	NTC
10	NTC

NTC: Not to connect

24 Vin Models

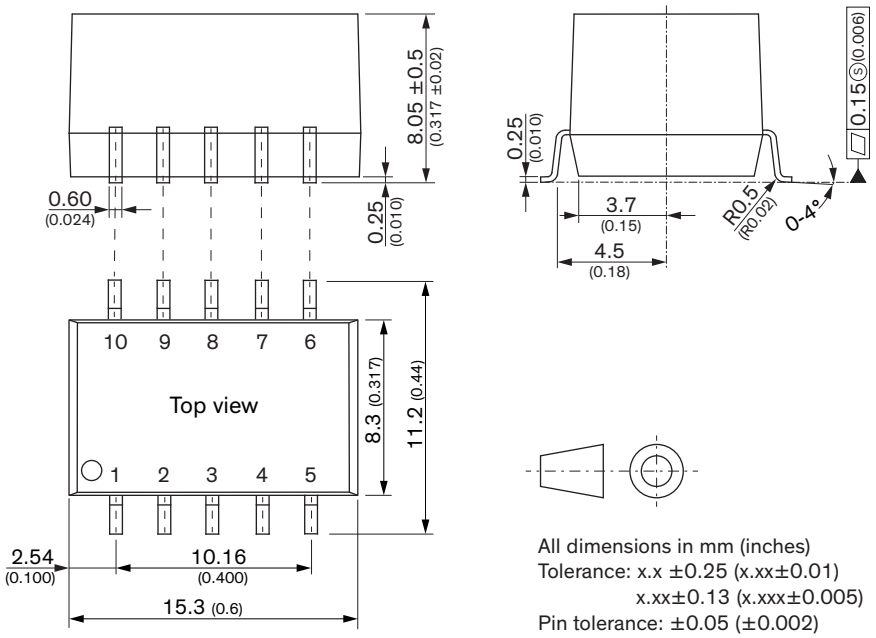

All dimensions in mm (inches)
Tolerance: x.x ±0.25 (x.xx±0.01)
x.xx±0.13 (x.xxx±0.005)
Pin tolerance: ±0.05 (±0.002)

All specifications valid at nominal voltage, resistive full load and +25°C after warm-up time, unless otherwise stated.

Recommended Solder Pad Layout

Single Output Models

5 Vin & 12 Vin Models

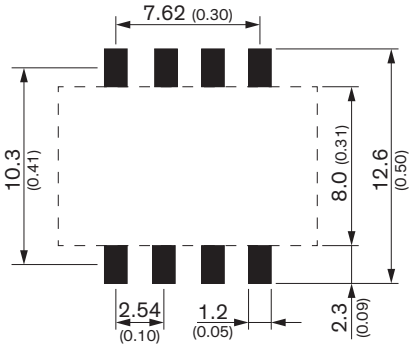

24 Vin Models

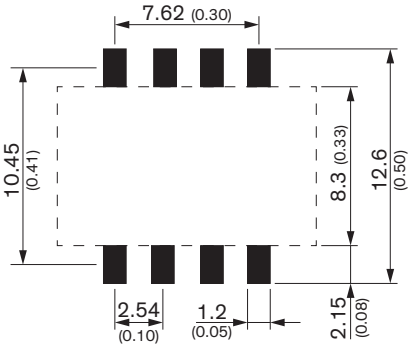

Dual Output Models

5 Vin & 12 Vin Models

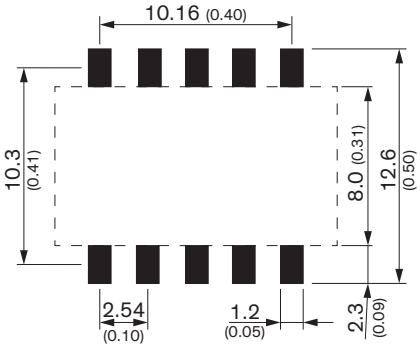

24 Vin Models

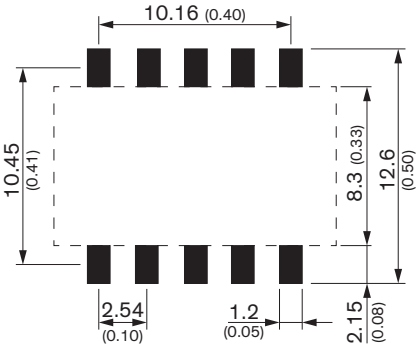

Dimensions in mm (inch)

© Copyright 2025 Traco Electronic AG
Specifications can be changed without notice.