REVISIONS					
REV.	ECN NO.	LOCATION	DESCRIPTION	DATE	DESIGN
A0	N/A		INITIAL RELEASE	/	/
A1	N/A		料号材质变更，图面升级整理图面	2025.1.6	阿树

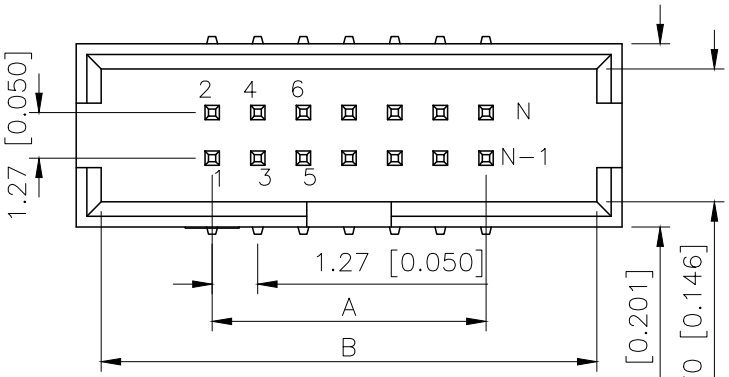

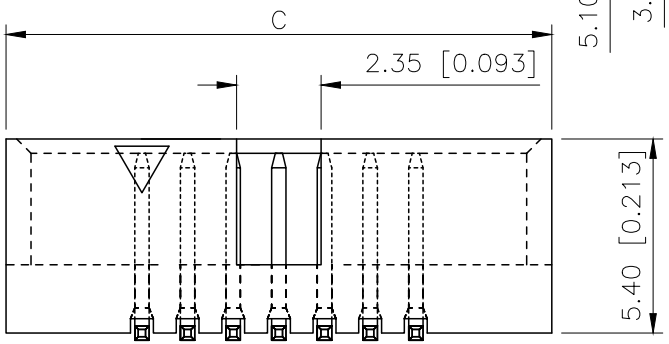

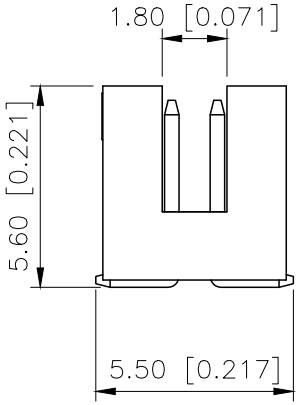

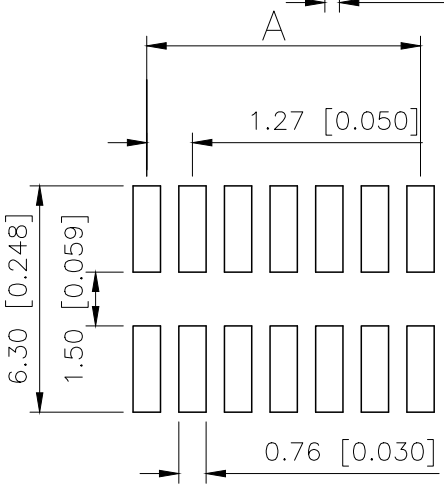

MATING PART

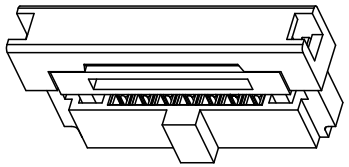

Specifications:
规格：
Voltage rating:250V AC/DC
额定电压：250V AC/DC
Current rating:1A AC/DC
额定电流：1A AC/DC
Withstanding voltage:500V AC/minute
耐受电压：500V AC/分钟
Temperature range:−40℃−+125℃
温度范围：−40℃−+125℃
Insulation resistance:≥1000MΩ
绝缘电阻：≥1000MΩ
Contact resistance:≤20mΩ
接触电阻：≤20mΩ

PART NO.:

X1270 W V S−2x04 B−9T V01
① ② ③ ④ ⑤ ⑥ ⑦ ⑧

①Series No
②Category:W−Wafer
③Welding Board Angle:V−Stright 180°
④Welding Way:S−SMT
⑤Row No−Pin No:2xXX−2x05P~2x30P
⑥B:Contains gaps
⑦Material:9T−Nylon−9T UL94V−0
⑧Plating Category: V01−All Gold Flash

PIN	A	B	C
2x03	2.54	8.71	10.11
2x04	3.81	9.98	11.38
2x05	5.08	11.25	12.65
2x07	7.62	13.79	15.19
2x08	8.89	15.06	16.46
2x10	11.43	17.60	19.00
2x12	13.97	20.14	21.54
2x13	15.24	21.41	22.81
2x15	17.78	23.95	25.35
2x17	20.32	26.49	27.89
2x20	24.13	30.30	31.70
2x22	26.67	32.84	34.24
2x25	30.48	36.65	38.05
2x30	36.83	43.00	44.40

PART NO	Material	Material(Pin And Solder Tabs)	Finish(Pin And Solder Tabs)	Suitible XKB Terminal
X1270WVS−2x04B−9TV01	Nylon−9T UL 94V−0	Brass	Gold Flash	X1270H

AuGLAR	±5°
X.	±0.40
X.x	±0.30
X.xx	±0.20
X.xxx	±0.15
UNSPECIFIED TOLERAuCES	

XKB Connection 星创

DESIGN	阿树	VIEW:	MODEL TYPE: 1.27mm BTB Style Connectors
CHECKED		UNIT: mm/in	PART NO.: X1270WVS−2x04B−9TV01
APPROVED		SIZE: A4	DWG NO.: X−X1270WVS−2x04B−9TV01

XKB INDUSTRIAL PRECISION CO.,LIMITED

SCALE	PAGE	REVISION
N/A	1/1	A1