REV.	DESCRIPTION	ECN NO.	NAME	DATE

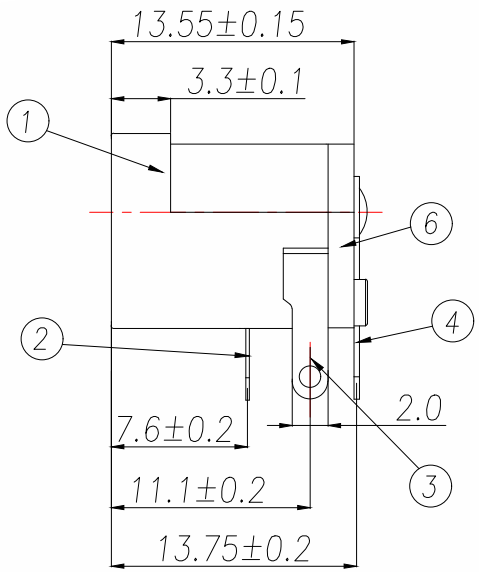

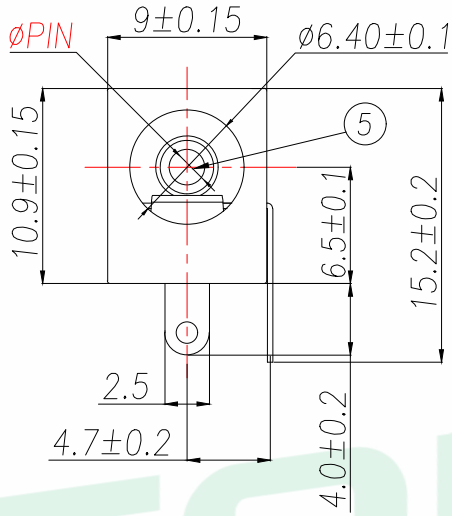

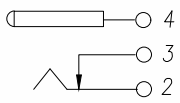

ELECTRICAL CIRCUIT

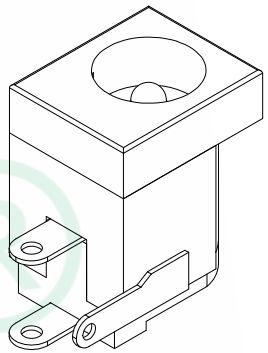

SPECIFICATIONS

1.TEMPERATURE RANGE:−30~70°
2.RATED VOLTAGE/CURRENT:30V DC/0.5A
3.CONTACT RESISTANCE:≤0.03Ω
4.INSULLATION RESISTANCE:≥100MΩ DC250V
5.WITHSTANDING VOLTAGE: AC500V(50Hz)/min
6.INSERTION FORCE:3~20N
7.DURABILITY CYCLES: 5000 CYCLES

PIN	P/N
Ø2.0	DC-005-2.0-W
Ø2.5	DC-005-2.5-W

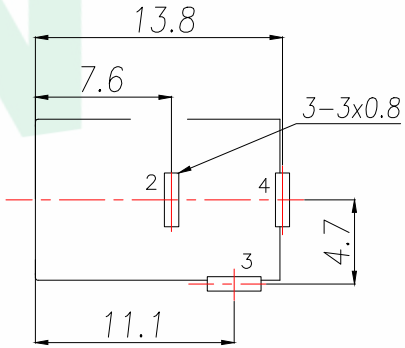

RECOMMENDED PCB LAYOUT

NO.	DESCRIPTION	QTY	MATERIAL	FINISH
6	COVER	1	PA66	BLACK
5	PIN	1	BRASS	D.CuSn
4	TERMINAL-3#	1	BRASS T=0.30	D.CuSn
3	TERMINAL-2#	1	BRASS T=0.30	D.CuSn
2	TERMINAL-1#	1	PHOSPHOR BRONZE	D.SnSb
1	HOUSING	1	PA66	BLACK

GENERAL TOLERANCE

DIM.	TOL.
x.	±0.30
x.x	±0.20
x.xx	±0.10
GENERAL ANGLE:	±3°

DONGGUAN BAOXUN PRECISION TECHNOLOGY CO., LTD

BXCONN®

TITLE: DC SOCKET

DWG. NO.: DC-005-XX-W

CHECKED: MAX

PART NO.: DC-005-XX-W

DRAWN: ELLA

UNIT:	SCALE:	SHEET:	DWG. SIZE:	LAYER:	APPROVED:
mm	none	1of 1	A4	bxconn	WILL