REVISIONS					
REV.	ECN NO.	LOCATION	DESCRIPTION	DATE	DESIGN
A1	N/A			2024.11.09	
A2	N/A			2026.03.09	

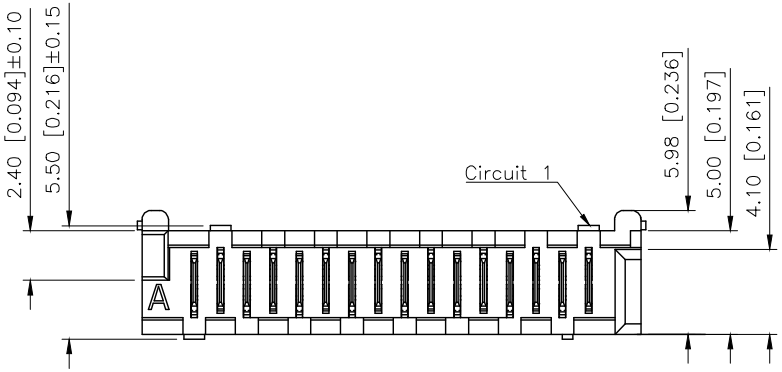

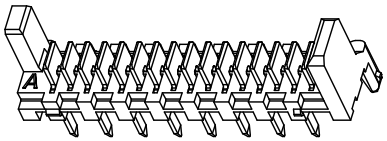

■SPECIFICATIONS
- •Voltage rating:500V AC/DC
- •Current rating:2.4A AC/DC
- •Withstanding Voltage:500V AC/minute
- •Temperature range:−40°C~+125°C
- •Insulation resistance:≥1000MΩ

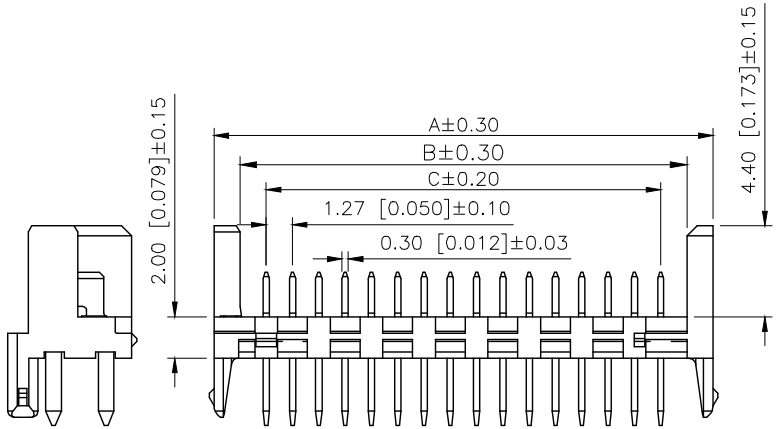

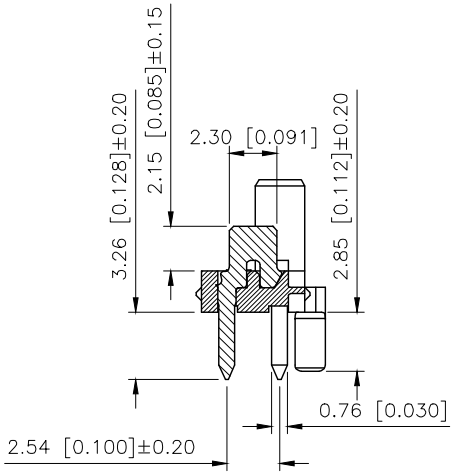

PART NO.:

X1273 W V−04−9T SW W

Series No
Category:W−Wafer
Welding Board Angle:V−Stright 180°
Row No.Pin No:XX−04~26Pin
Material: 9T−PA9T UL 94V−0
Plating Category: SW−Bright tin Plating
Color: BK−Black W−White

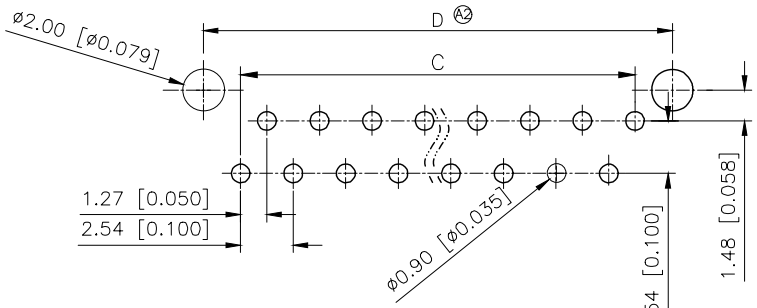

Recommended PCB Layout(Top Side)
(PCB BOARD TOLERANCE±0.05)

Poles	DIM.A	DIM.B	DIM.C	DIM.D	Poles	DIM.A	DIM.B	DIM.C	DIM.D
4	8.86	6.35	3.81	7.66	16	24.10	21.59	19.05	22.90
6	11.40	8.89	6.35	10.20	18	26.64	24.13	21.59	25.44
8	13.94	11.43	8.89	12.74	20	29.18	26.67	24.13	27.98
10	16.48	13.94	11.43	15.28	22	31.72	29.21	26.67	30.52
12	19.02	16.51	13.97	17.82	24	34.26	31.75	29.21	33.06
14	21.56	19.05	16.51	20.36	26	36.80	34.29	31.75	35.60

PART NO	Color	Material	Material(Pin)	Finish(Pin)
X1273WV−04−9TSWBK	Black	Nylon 9T UL94V−0	Brass	Tin−Plated
X1273WV−04−9TSWW	White			

AuGLAR	±5°
X.	±0.40
X.x	±0.30
X.xx	±0.20
X.xxx	±0.15
UNSPECIFIED TOLERAuCES	

XKB Connection

DESIGN		VIEW:	MODEL TYPE: 1.27mm Crimp Style Connectors
CHECKED		UNIT: mm/in	PART NO.: X1273WV−04−9TSWW
APPROVED		SIZE: A4	DWG NO.:

XKB INDUSTRIAL PRECISION CO.,LIMITED

SCALE	PAGE	REVISION
N/A	1/1	A2