ROHS

REV.	ECN NO.	DESCRIPTION	DRAW	DATE

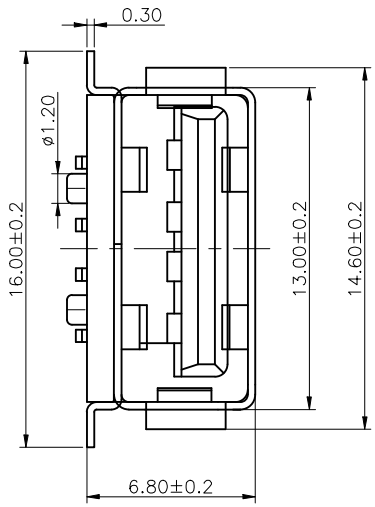

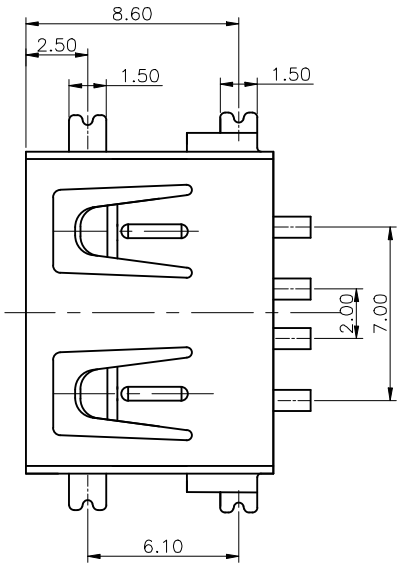

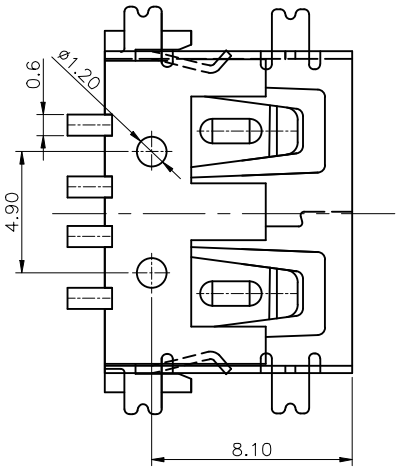

NOTES:
1.MATERIAL SPECIFCATION
1.1 INSULATION MATERIAL THERMOPLASTIC UL94V-0 LCP Black ROHS.
1.2 SHELL:SPCC,T:0.30mm PLATING: NICKEL 50U"
1.3 TERMINAL:C2680 T:0.25mm PLATING: GOLD G/F /TIN PLATED 50U".
2.ELECTRICAL CHARACTERISTIC:
2.1 INSULATION RESISTANCE:1000MΩ MIN.
2.2 CONTACT RESISTANCE:30mΩ MAX.
2.3 WITHSTANDING VOLTAGE:500V AC.
3.MECHANICAL CHARACTERISTICS:
3.1 INSERTION FORCE:35N MAX.
3.2 EXTRACTION FORCE:10N MIN.

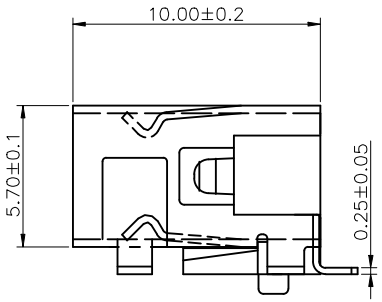

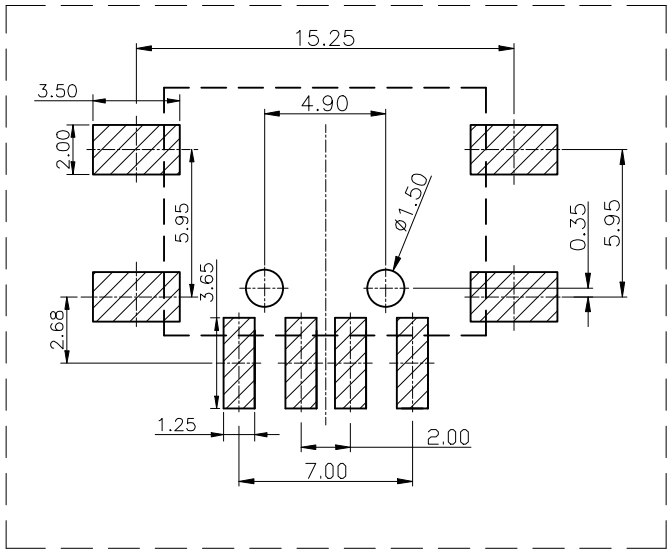

PCB LAYOUT

COSTOMER DRAWING			LAILAN 深圳市莱联电子有限公司 SHENZHEN LAILIAN ELECTRONICS CO.,LTD		
DRAWING					
CHECK					
APPROVAL			TITLE	TYPE-A连接器4PIN-卧贴L10.0(直口)	REV. A
TOLERANCES ARE					
30-150	±0.35	ANGLE	PART NO.	LAIL-TYPE-A-4P-02-WT	UNITS mm
10-30	±0.2				
5-10	±0.15	±3°	DWG.NO.		Projection
0-5	±0.1				