ROHS

REV.	ECN NO.	DESCRIPTION	DRAW	DATE

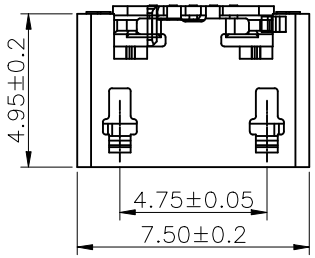

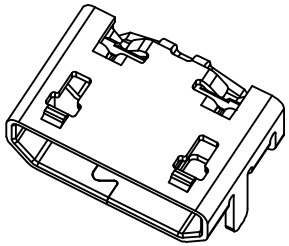

5	GND
4	ID
3	D+
2	D−
1	VBUS
PIN	NAME
PIN ASSIGNMENT	

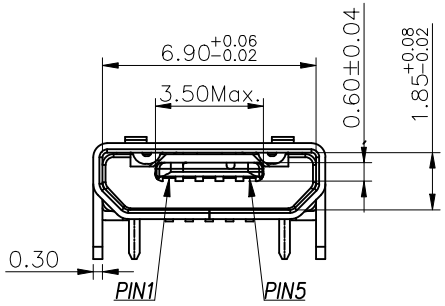

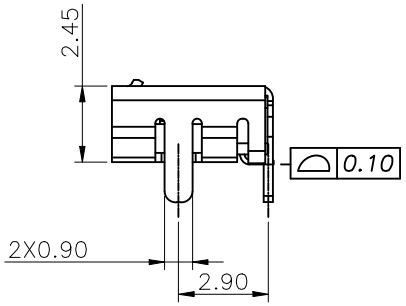

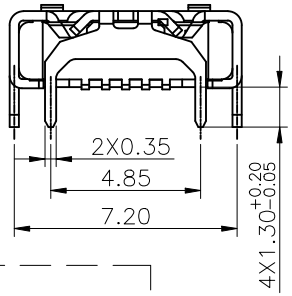

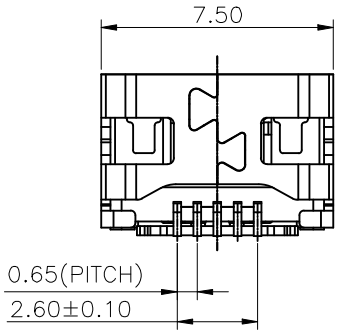

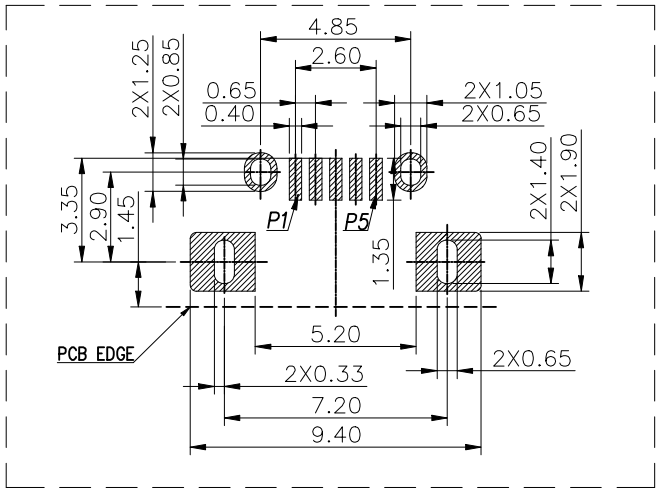

RECOMMENDED PCB LAYOUT(TOP VIEW)
GENERAL TOLERANCES:±0.05

NOTE:
1.MATERIAL SPECIFICATION:
1−1.HOUSING:HIGH TEMPERATURE RESISTANT PLASTIC, LCP UL94V−0 Rated BLACK.
1−2.CONTACTS: COPPER ALLOY(C2680 T=0.15mm).
1−3.FRONT SHELL: STAINLESS STEEL(SUS304 T=0.30mm).
1−4.PLATE: STAINLESS STEEL(SUS304 T=0.10mm).
2.PLATING SPECIFICATION:
2−1.CONTACTS:
Ni 50u" MIN. UNDER PLATED OVER ALL.
Au:G/F PLATED ON THE FUNCTIONAL AREA OF CONTACT.
Au:G/F PLATED ON SOLDER AREA.
2−2.FRONT SHELL:
MATTE TIN 80u" PLATED OVER NICKEL.
Ni 50u"−100u". UNDER PLATED OVER ALL.
3.MECHANICAL PERFORMANCE,
3−1.INSERTION FORCE: 3.5Kgf MAX
3−2.REMOVAL FORCE: 0.8kgf MIN
3−3.DURABILITY: 10000 CYCLES.
4.ELECTRICAL PERFORMANCE,
4−1.CURRENT RATING:
VBUS & GND PINS: 1.8A MAX.
OTHER PINS: 0.5A MAX.
4−2. LLCR:
VBUS & GND PINS AND OTHER PINS: 30mΩ/PIN MAX.
SHIELD: 50mΩ/MAX.
LLCR MAX. CHANGE OF ALL PINS: 10mΩ.
4−3.INSULATION RESISTANCE: 100MΩ MIN
4−4.DIELECTRIC WITHSTAND VOLTAGE,AC 100V FOR 1 MINUTE.
5. ENVIRONMENTAL PERFORMANCE:
OPERATING TEMPERATURE: −55°C~+85°C.
6.IR REFLOW:
THE PEAK TEMPERATURE ON THE BOARD SHALL BE MAINTAINED FOR 10 SECONDS AT 260°C.

COSTOMER DRAWING			LAILAN 深圳市莱联电子有限公司 SHENZHEN LAILIAN ELECTRONICS CO.,LTD		
DRAWING					
CHECK					
APPROVAL			TITLE	MICRO-B连接器5PIN卧贴L4.95(平口)	REV. A
TOLERANCES ARE					
30-150	±0.35	ANGLE	PART NO.	LAIL-MICRO-B-5P-01-WT	UNITS mm
10-30	±0.2				
5-10	±0.15	±3°	DWG.NO.		Projection
0-5	±0.1				