© 2021 TE Connectivity. All Rights Reserved.

REVISIONS					
P	LTR	DESCRIPTION	DATE	DWN	APVD
	A	INITIAL RELEASE	29MAR22	D.Z	Z.Z
	C4	ECN-23-229749	25AUG23	D.Z	Z.Z
	C5	ECN-24-298016	13DEC24	D.Z	Z.Z
	C6	ECN-25-301031	08JAN25	D.Z	Z.Z

1. PACKAGING:
   a. TAPE AND REEL + CARTON FOR ASSY PN: 2404815-1/-2/-9
   b. TRAY + BOX FOR ASSY PN: 1-2404815-1/-2
   c. TRAY + CARTON FOR ASSY PN: 2-2404815-1/-2/-9

2. ALL DEMENSIONS (IN BRACKNETS) FOR INFORMATION ONLY.

3. MATE-AX MATING/UNMATING PLUG HOUSING ASSEMBLY ACC. TO PN:2354439-*
   OR PLEASE CONTACT TE CONNECTIVITY.

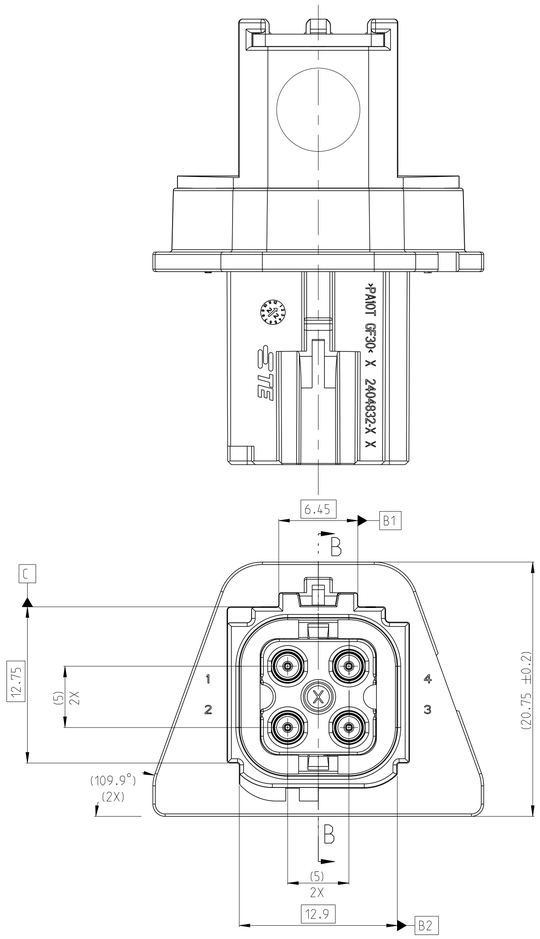

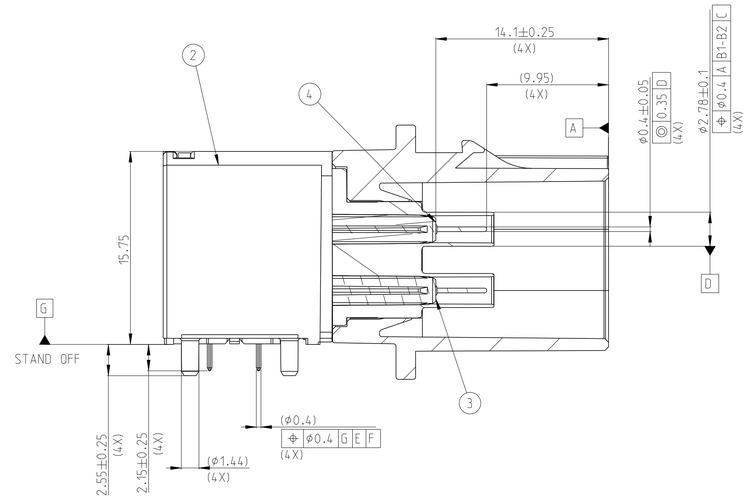

SECTION B-B

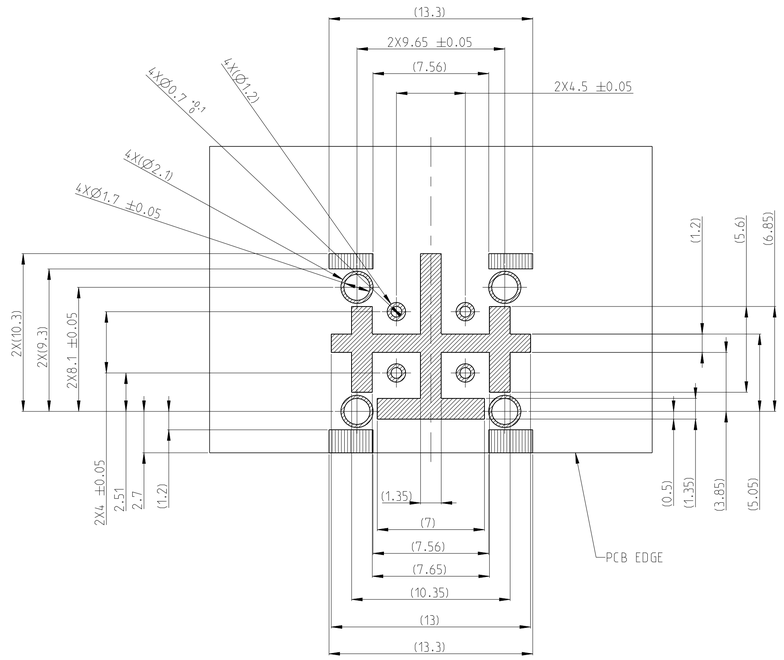

ONLY FOR INFORMATION
PCB LAYOUT RECOMMENDED

solder area
keep out area.free of solder, no routing underneath

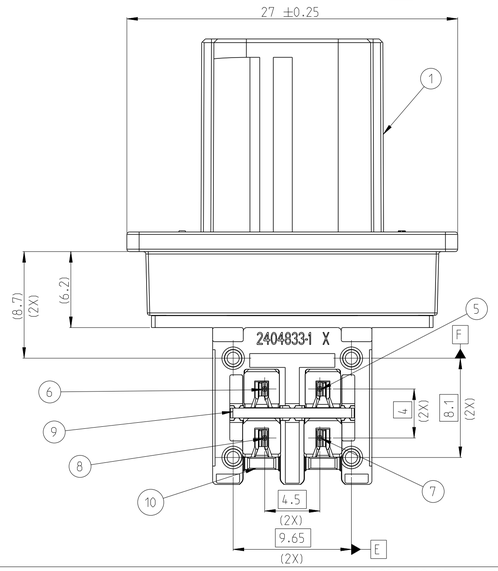

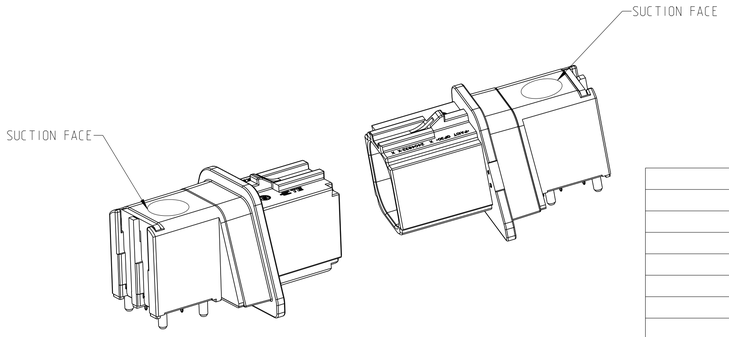

QUANTITY										CODE	DESCRIPTION	MATERIAL	FINISH & COLOR	ITEM NO.
1											BLACK-SHIELDING	COPPER ALLOY	1μm MIN. Ni PLATING	10
1											SHIELDING COVER	COPPER ALLOY	3μm MIN. Sn OVER Ni	9
1											CONTACT PIN(RIGHT LONG)	COPPER ALLOY	SOLOED DIDE: 3μm MIN. Sn OVER Ni INTERFACE SIDE: 2μm MIN. Ag OVER Ni	8
1											CONTACT PIN(RIGHT LONG)			7
1											CONTACT PIN(RIGHT SHORT)			6
1											CONTACT PIN(LEFT SHORT)			5
2											CAVITY BLOCK(LONG)	PA10T	BLACK	4
2											CAVITY BLOCK(SHORT)			3
1											SHIELD BODY	Zn ALLOY	3μm MIN. Sn OVER Ni	2
		1							1	Z	CODING HOUSING	PA10T	WATER BLUE	1
								1		D			CLARET VIOLET	
							1			C			LIGHT BLUE	
	1			1		1				B			PURE WHITE	
1			1		1					A			JET BLACK	
2-2404815-1	2-2404815-2	2-2404815-9	1-2404815-1	1-2404815-2	2404815-1	2404815-2	2404815-3	2404815-4	2404815-9	ASSY NO. X-2404815-Y				
A	B	Z	A	B	A	B	C	D	Z	ASSY CODE				
C	C	C	C	C	C	C	C	C	C	REVISION				

CODINGS.STANDARD ORIENTATION

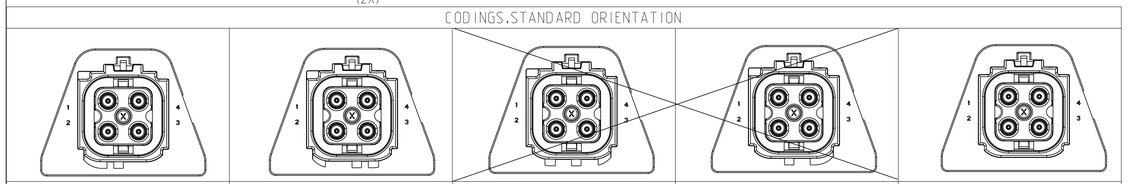

CODING A	CODING B	CODING C	CODING D	CODING Z

THIS DRAWING IS A CONTROLLED DOCUMENT.

DIMENSIONS: mm

TOLERANCES UNLESS OTHERWISE SPECIFIED:
0 PLC ±
1 PLC ±0.4
2 PLC ±0.3
3 PLC ±
4 PLC ±
ANGLES ±2°

MATERIAL -
FINISH -

DWN	D.Zou	14MAR2022
CHK	C.Wan	14MAR2022
APVD	Z.Zhou	14MAR2022
PRODUCT SPEC	108-160522	
APPLICATION SPEC	114-160601	
WEIGHT	-	

TE Connectivity

NAME 1X4 COMBO.MATE-AX.HDR ASSY.SEALED
-
-

SIZE	CAGE CODE	DRAWING NO	RESTRICTED TO
A1	00779	C-2404815	-

CUSTOMER DRAWING | SCALE 4:1 | SHEET 1 OF 1 | REV C6

4805 (3/13)