SOCAY

HF RoHS

Surface Mount Resettable PTCs

SCF1206RB Series

Features

- RoHS Compliant & Halogen Free
- Faster tripping, 1206 Dimension, Surface mountable, Solid state
- Operation Current: 0.05A ~ 2.00A
- Maximum Voltage: 6V ~ 60Vdc
- Operating Temperature: -40℃ ~ + 85℃

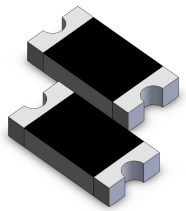

Electrical Parameters

Part Number	Hold Current	Trip Current	Rated Voltage	Max Current	Typical Power	Maximum Time To Trip		Resistance	
	I_{hold} (A)	I_{trip} (A)	V_{max} (Vdc)	I_{max} (A)	$P_{dtyp.}$ (W)	Current (A)	Time (Sec.)	R_{min} (Ω)	R_{1max} (Ω)
SCF005-1206RB	0.05	0.15	60.0	100	0.4	0.25	1.50	3.600	50.00
SCF010-1206RB	0.10	0.25	60.0	100	0.4	0.50	1.00	1.600	15.00
SCF012-1206RB	0.12	0.29	30.0	100	0.4	1.00	0.20	1.350	12.00
SCF012-60-1206RB	0.12	0.29	60.0	100	0.6	1.00	0.20	1.350	10.00
SCF016-1206RB	0.16	0.37	30.0	100	0.4	1.00	0.30	1.000	6.000
SCF020-1206RB	0.20	0.46	24.0	100	0.6	8.00	0.08	0.350	3.500
SCF020-30-1206RB	0.20	0.46	30.0	100	0.6	8.00	0.08	0.350	3.500
SCF025-1206RB	0.25	0.50	16.0	100	0.6	8.00	0.08	0.350	2.700
SCF025-24-1206RB	0.25	0.50	24.0	100	0.6	8.00	0.08	0.350	2.700
SCF030-1206RB	0.30	0.65	16.0	100	0.6	8.00	0.10	0.250	2.000
SCF035-1206RB	0.35	0.75	16.0	100	0.6	8.00	0.10	0.250	1.300
SCF035-24-1206RB	0.35	0.75	24.0	100	0.6	8.00	0.10	0.250	1.400
SCF035-30-1206RB	0.35	0.75	30.0	100	0.6	8.00	0.10	0.250	1.400
SCF050-1206RB	0.50	1.00	6.0	100	0.6	8.00	0.10	0.150	0.700
SCF050-13.2-1206RB	0.50	1.00	13.2	100	0.6	8.00	0.10	0.150	0.700
SCF050-16-1206RB	0.50	1.00	16.0	100	0.6	8.00	0.10	0.150	1.000
SCF050-24-1206RB	0.50	1.00	24.0	100	0.6	8.00	0.10	0.150	0.750
SCF050-30-1206RB	0.50	1.00	30.0	100	0.6	8.00	0.10	0.150	1.000
SCF075-1206RB	0.75	1.50	6.0	100	0.6	8.00	0.20	0.090	0.500
SCF075-13.2-1206RB	0.75	1.50	13.2	100	0.6	8.00	0.20	0.090	0.500
SCF075-16-1206RB	0.75	1.50	16.0	100	0.6	8.00	0.20	0.090	0.500
SCF075-30-1206RB	0.75	1.50	30.0	100	0.6	8.00	0.20	0.090	0.500

@ SOCAY Electronics Corp., Ltd. 2025
Specifications are subject to change without notice.
Please refer to www.socay.com for current information.

Surface Mount Resettable PTCs

SCF1206RB Series

Electrical Parameters (Continue)

Part Number	Hold Current	Trip Current	Rated Voltage	Max Current	Typical Power	Maximum Time To Trip		Resistance	
	I_{hold} (A)	I_{trip} (A)	V_{max} (Vdc)	I_{max} (A)	$P_{dtyp.}$ (W)	Current (A)	Time (Sec.)	R_{min} (Ω)	R_{1max} (Ω)
SCF100-1206RB	1.00	1.80	6.0	100	0.6	8.00	0.30	0.055	0.270
SCF100-13.2-1206RB	1.00	1.80	13.2	100	0.6	8.00	0.30	0.055	0.270
SCF100-24-1206RB	1.00	1.80	24.0	40	0.6	8.00	0.30	0.050	0.320
SCF110-1206RB	1.10	1.80	8.0	100	0.6	8.00	0.30	0.050	0.230
SCF110-16-1206RB	1.10	1.80	16.0	100	0.6	8.00	0.30	0.050	0.260
SCF125-16-1206RB	1.25	2.50	16.0	40	0.6	8.00	1.00	0.040	0.200
SCF150-1206RB	1.50	3.00	6.0	100	0.8	8.00	1.00	0.040	0.130
SCF150-12-1206RB	1.50	3.00	12.0	40	0.6	8.00	1.00	0.040	0.130
SCF150-16-1206RB	1.50	3.00	16.0	40	0.6	8.00	1.00	0.040	0.130
SCF175-16-1206RB	1.75	3.30	16.0	40	0.8	8.00	1.50	0.020	0.115
SCF200-1206RB	2.00	3.50	6.0	100	0.8	8.00	1.00	0.018	0.080

I_{hold} = Hold Current. Maximum current device will not trip in 25℃ still air.

I_{trip} = Trip Current. Minimum current at which the device will always trip in 25℃ still air.

V_{max} = Maximum operating voltage device can withstand without damage at rated current (Imax).

I_{max} = Maximum fault current device can withstand without damage at rated voltage (Vmax).

P_{dtyp} =Maximum power dissipation when device is in the tripped state in 25℃ still air environment at rated voltage.

R_{min} = Minimum device resistance prior to tripping at 25℃.

R_{1max} = Maximum device resistance is measured one hour post reflow.

Test Procedures and Requirements

Test Item	Test Conditions	Accept / Reject Criteria
Resistance	In still air @ 25℃	$R_{min} \le R \le R_{1max}$
Time to Trip	Specified current, V_{max}, 25℃	T≤Maximum Time to Trip
Holding Current	30min, at I_H	No trip
Trip Cycle Life	V_{max}, I_{max}, 100cycles	No arcing or burning
Trip Endurance	V_{max}, 1 hour	No arcing or burning

Physical Characteristics

Terminal Materials	Tin-Plated Nickle-copper
Soldering Zone	Meets EIA specification RS 186-9E and ANSI/J-STD-002 Category 3.

@ SOCAY Electronics Corp., Ltd. 2025
Specifications are subject to change without notice.
Please refer to www.socay.com for current information.

Surface Mount Resettable PTCs

SCF1206RB Series

Environmental Specifications

Test Item	Test Conditions	Resistance Change
Passive Aging	85℃,1000 hours	±10%
Humidity Aging	85℃/85%RH.100 hours	±5%
Thermal Shock	MIL-STD-202, Method 107G +85℃/-40℃, 20 times	±33% typical resistance change
Solvent Resistance	MIL-STD-202, Method 215	No change
Vibration	ML-STD-883C, Test Condition A	No change

Thermal Derating Chart - I_H (A)

Model	Maximum Ambient Operating Temperature (℃)								
	-40	-20	0	25	40	50	60	70	85
SCF005-1206RB	0.09	0.08	0.06	0.05	0.04	0.036	0.033	0.029	0.02
SCF010-1206RB	0.18	0.16	0.12	0.10	0.08	0.072	0.066	0.058	0.04
SCF012-1206RB	0.216	0.192	0.144	0.120	0.096	0.086	0.079	0.070	0.048
SCF012-60-1206RB	0.216	0.192	0.144	0.120	0.096	0.086	0.079	0.070	0.048
SCF016-1206RB	0.288	0.256	0.192	0.160	0.128	0.115	0.106	0.093	0.064
SCF020-1206RB	0.31	0.26	0.22	0.20	0.18	0.16	0.15	0.13	0.07
SCF020-30-1206RB	0.31	0.26	0.22	0.20	0.18	0.16	0.15	0.13	0.07
SCF025-1206RB	0.37	0.33	0.29	0.25	0.22	0.20	0.17	0.15	0.12
SCF025-24-1206RB	0.37	0.33	0.29	0.25	0.22	0.20	0.17	0.15	0.12
SCF030-1206RB	0.444	0.396	0.348	0.30	0.264	0.24	0.204	0.18	0.144
SCF035-1206RB	0.50	0.45	0.40	0.35	0.30	0.27	0.24	0.21	0.15
SCF035-24-1206RB	0.50	0.45	0.40	0.35	0.30	0.27	0.24	0.21	0.15
SCF035-30-1206RB	0.50	0.45	0.40	0.35	0.30	0.27	0.24	0.21	0.15
SCF050-1206RB	0.71	0.64	0.57	0.50	0.42	0.39	0.35	0.31	0.25
SCF050-13.2-1206RB	0.71	0.64	0.57	0.50	0.42	0.39	0.35	0.31	0.25
SCF050-16-1206RB	0.71	0.64	0.57	0.50	0.42	0.39	0.35	0.31	0.25
SCF050-24-1206RB	0.639	0.576	0.513	0.50	0.378	0.351	0.315	0.279	0.225
SCF050-30-1206RB	0.639	0.576	0.513	0.50	0.378	0.351	0.315	0.279	0.225

@ SOCAY Electronics Corp., Ltd. 2025
Specifications are subject to change without notice.
Please refer to www.socay.com for current information.

Surface Mount Resettable PTCs

SCF1206RB Series

Thermal Derating Chart - I_H (A) (Continue)

Model	Maximum Ambient Operating Temperature (℃)								
	-40	-20	0	25	40	50	60	70	85
SCF075-1206RB	1.14	1.01	0.88	0.75	0.65	0.59	0.54	0.49	0.41
SCF075-13.2-1206RB	1.14	1.01	0.88	0.75	0.65	0.59	0.54	0.49	0.41
SCF075-16-1206RB	1.14	1.01	0.88	0.75	0.65	0.59	0.54	0.49	0.41
SCF075-30-1206RB	1.14	1.01	0.88	0.75	0.65	0.59	0.54	0.49	0.41
SCF100-1206RB	1.45	1.31	1.15	1.00	0.84	0.77	0.69	0.61	0.48
SCF100-13.2-1206RB	1.305	1.179	1.035	1.00	0.756	0.693	0.621	0.549	0.432
SCF100-24-1206RB	1.305	1.179	1.035	1.00	0.756	0.693	0.621	0.549	0.432
SCF110-1206RB	1.595	1.441	1.265	1.10	0.924	0.847	0.759	0.671	0.528
SCF110-16-1206RB	1.595	1.441	1.265	1.10	0.924	0.847	0.759	0.671	0.528
SCF125-16-1206RB	1.813	1.638	1.438	1.250	1.050	0.963	0.863	0.763	0.600
SCF150-1206RB	2.18	1.94	1.72	1.50	1.28	1.17	1.06	0.96	0.77
SCF150-12-1206RB	2.18	1.94	1.72	1.50	1.28	1.17	1.06	0.96	0.77
SCF150-16-1206RB	2.18	1.94	1.72	1.50	1.28	1.17	1.06	0.96	0.77
SCF175-16-1206RB	2.54	2.26	2.01	1.75	1.49	1.37	1.24	1.12	0.90
SCF200-1206RB	2.60	2.44	2.35	2.00	1.78	1.67	1.50	1.45	1.10

Soldering Parameters

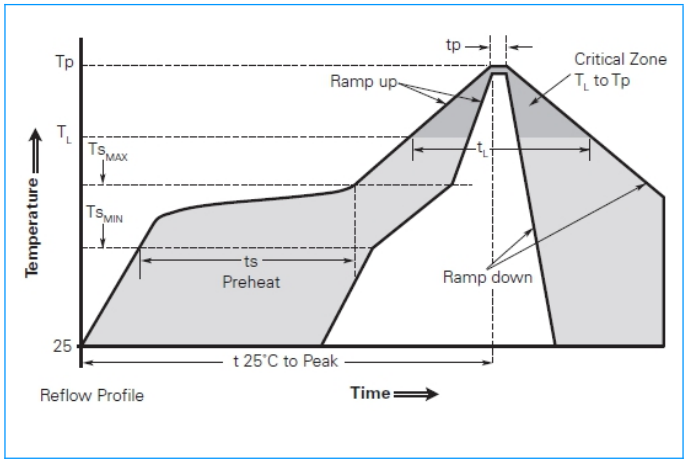

Profile Feature	Pb-Free Assembly
Average Ramp-Up Rate (T_S max to T_P)	3℃/second max.
Preheat : Temperature Min ($T_S$min) Temperature Max ($T_S$max) Time ($T_S$min to $T_S$max)	 150℃ 200℃ 60-120 seconds
Time maintained above: Temperature(T_L) Time (T_L)	 217℃ 60-150 seconds
Peak/Classification Temperature(T_P)	260℃
Time within 5 ℃ of actual peak temperature: Time (T_P)	30 seconds max.
Ramp-down Rate	3℃/ second max.
Time 25℃ to Peak Temperature	8 minutes max.

- *Recommended reflow methods: I_R, vapor phase oven, hot air oven, N2 environment for lead-free.*
- *Devices are not designed to be wave soldered to the bottom side of the board.*
- *Recommended maximum paste thickness is 0.25mm (0.010inch).*
- *Devices can be cleaned using standard industry methods and solvents.*
- *Soldering temperature profile meets RoHS leadfree process.*

Note 1: All temperature refer to topside of the package,measured on the package body surface.
Note 2: If reflow temperature exceed the recommended profile,devices may not meet the performance requirements.

@ SOCAY Electronics Corp., Ltd. 2025
Specifications are subject to change without notice.
Please refer to www.socay.com for current information.

Surface Mount Resettable PTCs

SCF1206RB Series

Part Numbering

SCF XXX – XX – 1206 RB

- Internal Code
- Device Size Code
- Rated Voltage
- Hold Current
- Socay Product Code

Recommended Solder Pad Layout Dimensions (Unit: mm)

The dimension in the table below provide the recommended pad layout for each SCF1206RB Series device

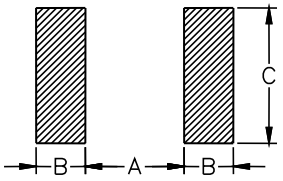

Device	A	B	C
1206 Series	2.0±0.1	1.0±0.1	1.9±0.1

Product Dimensions (Unit: mm)

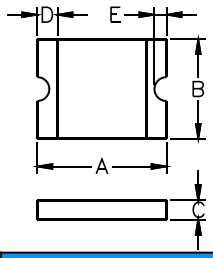

Part Number	A		B		C		D	E
	Min.	Max.	Min.	Max.	Min.	Max.	Min.	Min.
SCF005-1206RB	3.00	3.50	1.50	1.80	0.60	1.10	0.15	0.10
SCF010-1206RB	3.00	3.50	1.50	1.80	0.60	1.10	0.15	0.10
SCF012-1206RB	3.00	3.50	1.50	1.80	0.60	1.10	0.15	0.10
SCF012-60-1206RB	3.00	3.50	1.50	1.80	0.60	1.20	0.15	0.10
SCF016-1206RB	3.00	3.50	1.50	1.80	0.40	0.90	0.15	0.10
SCF020-1206RB	3.00	3.50	1.50	1.80	0.40	0.90	0.15	0.10
SCF020-30-1206RB	3.00	3.50	1.50	1.80	0.40	0.90	0.15	0.10
SCF025-1206RB	3.00	3.50	1.50	1.80	0.40	0.90	0.15	0.10
SCF025-24-1206RB	3.00	3.50	1.50	1.80	0.40	0.90	0.15	0.10

@ SOCAY Electronics Corp., Ltd. 2025
Specifications are subject to change without notice.
Please refer to www.socay.com for current information.

Surface Mount Resettable PTCs

SCF1206RB Series

Product Dimensions (Unit: mm) (Continue)

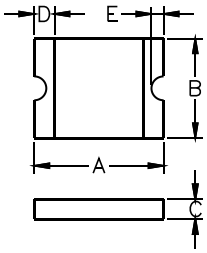

Part Number	A		B		C		D	E
	Min.	Max.	Min.	Max.	Min.	Max.	Min.	Min.
SCF030-1206RB	3.00	3.50	1.50	1.80	0.40	0.90	0.15	0.10
SCF035-1206RB	3.00	3.50	1.50	1.80	0.40	0.90	0.15	0.10
SCF035-24-1206RB	3.00	3.50	1.50	1.80	0.40	0.90	0.15	0.10
SCF035-30-1206RB	3.00	3.50	1.50	1.80	0.50	1.20	0.15	0.10
SCF050-1206RB	3.00	3.50	1.50	1.80	0.35	0.85	0.15	0.10
SCF050-13.2-1206RB	3.00	3.50	1.50	1.80	0.35	0.85	0.15	0.10
SCF050-16-1206RB	3.00	3.50	1.50	1.80	0.35	0.85	0.15	0.10
SCF050-24-1206RB	3.00	3.50	1.50	1.80	0.35	0.85	0.15	0.10
SCF050-30-1206RB	3.00	3.50	1.50	1.80	0.50	1.20	0.15	0.10
SCF075-1206RB	3.00	3.50	1.50	1.80	0.35	0.85	0.15	0.10
SCF075-13.2-1206RB	3.00	3.50	1.50	1.80	0.35	0.85	0.15	0.10
SCF075-16-1206RB	3.00	3.50	1.50	1.80	0.60	1.30	0.15	0.10
SCF075-30-1206RB	3.00	3.50	1.50	1.80	0.70	1.70	0.15	0.10
SCF100-1206RB	3.00	3.50	1.50	1.80	0.40	0.80	0.15	0.10
SCF100-13.2-1206RB	3.00	3.50	1.50	1.80	0.40	1.30	0.15	0.10
SCF100-24-1206RB	3.00	3.50	1.50	1.80	0.90	1.90	0.15	0.10
SCF110-1206RB	3.00	3.50	1.50	1.80	0.40	0.80	0.15	0.10
SCF110-16-1206RB	3.00	3.50	1.50	1.80	0.60	1.30	0.15	0.10
SCF125-16-1206RB	3.00	3.50	1.50	1.80	0.70	1.60	0.15	0.10
SCF150-1206RB	3.00	3.50	1.50	1.80	0.60	1.50	0.15	0.10
SCF150-12-1206RB	3.00	3.50	1.50	1.80	0.80	1.80	0.15	0.10
SCF150-16-1206RB	3.00	3.50	1.50	1.80	0.80	1.80	0.15	0.10
SCF175-16-1206RB	3.00	3.50	1.50	1.80	0.70	1.80	0.15	0.10
SCF200-1206RB	3.00	3.50	1.50	1.80	0.70	1.50	0.15	0.10

@ SOCAY Electronics Corp., Ltd. 2025
Specifications are subject to change without notice.
Please refer to www.socay.com for current information.

Surface Mount Resettable PTCs

SCF1206RB Series

Packaging Quantity

Part Number	Quantity	Part Number	Quantity
SCF005-1206RB	3500 PCS	SCF050-30-1206RB	3500 PCS
SCF010-1206RB	3500 PCS	SCF075-1206RB	5000 PCS
SCF012-1206RB	3500 PCS	SCF075-13.2-1206RB	5000 PCS
SCF012-60-1206RB	3500 PCS	SCF075-16-1206RB	3500 PCS
SCF016-1206RB	5000 PCS	SCF075-30-1206RB	3500 PCS
SCF020-1206RB	5000 PCS	SCF100-1206RB	5000 PCS
SCF020-30-1206RB	5000 PCS	SCF100-13.2-1206RB	3500 PCS
SCF025-1206RB	5000 PCS	SCF100-24-1206RB	3500 PCS
SCF025-24-1206RB	5000 PCS	SCF110-1206RB	5000 PCS
SCF030-1206RB	5000 PCS	SCF110-16-1206RB	3500 PCS
SCF035-1206RB	5000 PCS	SCF125-16-1206RB	3500 PCS
SCF035-24-1206RB	3500 PCS	SCF150-1206RB	3500 PCS
SCF035-30-1206RB	3500 PCS	SCF150-12-1206RB	3500 PCS
SCF050-1206RB	5000 PCS	SCF150-16-1206RB	3500 PCS
SCF050-13.2-1206RB	5000 PCS	SCF175-16-1206RB	3500 PCS
SCF050-16-1206RB	5000 PCS	SCF200-1206RB	3500 PCS
SCF050-24-1206RB	3500 PCS	--	--

Tape Specifications (Unit: mm)

EIA Tape Component Dimensions

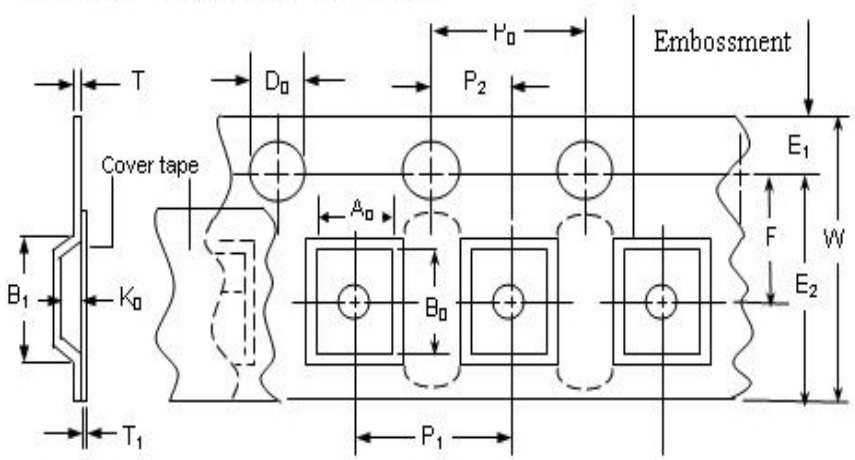

Symbol	Dimensions
W	8.15+0.15/-0.30
P_0	4.00±0.10
P_1	4.00±0.10
P_2	2.00±0.05
A_0	1.95±0.10
B_0	3.56±0.10
D_0	1.55±0.05
F	3.50±0.05
E_1	1.75±0.10
T	0.20±0.10
Leader min.	390
Trailer min.	160

@ SOCAY Electronics Corp., Ltd. 2025
Specifications are subject to change without notice.
Please refer to www.socay.com for current information.

Surface Mount Resettable PTCs

SCF1206RB Series

Reel Specifications (Unit: mm)

Reel Dimensions

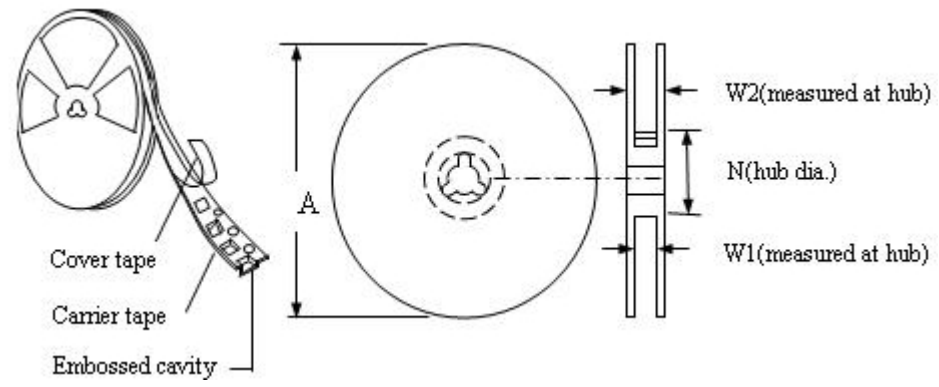

Symbol	Dimensions
A	178±1.0
N	59±1.0
W1	8.5+1.0/-0.2
W2	12.0±1.0

Warning

- Operation beyond the specified maximum ratings or improper use may result in damage and possible electrical arcing and/or flame.
- The electrical resistance and electrical performance specified in the specification are all tested on the test board designated after a reflow soldering. If there is a secondary soldering or other thermal processes, the performance may be attenuated.
- The holding current of PTC varies at different temperatures, please refer to the specifications and the actual ambient temperature for selection.
- PTC is designed to protect the occasional overcurrent or overheating failure phenomenon. Long-term or frequent failures will reduce the holding current of the product.
- The PTC soldering process is reflow soldering. The soldering process can refer to the temperature curve recommended in the specification. Manual soldering of PTC is prohibited. The use of hot air gun soldering of adjacent components will also affect the performance of PTC.
- PTC is a heat-sensitive component, avoid installing heat source components around it, and avoid installing it in an environment that is compressed or affects its thermal expansion.
- During installation or use, the PTC is forbidden to be mechanically damaged. It is not recommended to use liquid cleaning products containing organic solvents, which may affect the solder ability of PTC.

@ SOCAY Electronics Corp., Ltd. 2025
Specifications are subject to change without notice.
Please refer to www.socay.com for current information.