SOCAY

HF RoHS

Surface Mount Resettable PTCs

SCF0603RB Series

Features

- RoHS Compliant & Halogen Free
- Faster tripping, 0603 Dimension, Surface mountable, Solid state
- Operation Current: 0.01A ~ 0.50A
- Maximum Voltage: 6V ~ 30Vdc
- Operating Temperature: -40℃ ~ + 85℃

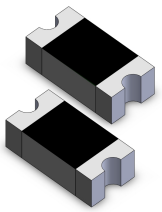

Electrical Parameters

Part Number	Hold Current	Trip Current	Rated Voltage	Max Current	Typical Power	Maximum Time To Trip		Resistance	
	I_{hold} (A)	I_{trip} (A)	V_{max} (Vdc)	I_{max} (A)	$P_{dtyp.}$ (W)	Current (A)	Time (Sec.)	R_{min} (Ω)	R_{1max} (Ω)
SCF001-0603RB	0.01	0.03	30.0	20.0	0.50	0.20	1.00	15.00	100.0
SCF002-0603RB	0.02	0.06	30.0	20.0	0.50	0.20	1.00	12.00	70.00
SCF003-0603RB	0.03	0.09	30.0	20.0	0.50	0.15	1.00	6.000	65.00
SCF004-0603RB	0.04	0.12	24.0	20.0	0.50	0.20	1.00	4.000	45.00
SCF005-0603RB	0.05	0.15	24.0	20.0	0.50	0.25	1.00	3.000	35.00
SCF010-0603RB	0.10	0.30	15.0	40.0	0.50	0.50	1.00	0.900	8.000
SCF020-0603RB	0.20	0.50	9.0	40.0	0.50	1.00	0.60	0.550	3.500
SCF020-12-0603RB	0.20	0.50	12.0	40.0	0.50	1.00	0.60	0.550	3.500
SCF025-0603RB	0.25	0.55	9.0	40.0	0.50	8.00	0.08	0.500	3.000
SCF030-0603RB	0.30	0.70	6.0	40.0	0.50	8.00	0.10	0.300	2.000
SCF035-0603RB	0.35	0.75	6.0	40.0	0.50	8.00	0.10	0.200	1.400
SCF040-0603RB	0.40	0.80	6.0	40.0	0.50	8.00	0.10	0.150	0.900
SCF050-0603RB	0.50	1.00	6.0	40.0	0.50	8.00	0.10	0.100	0.800

I_{hold} = Hold Current. Maximum current device will not trip in 25℃ still air.

I_{trip} = Trip Current. Minimum current at which the device will always trip in 25℃ still air.

V_{max} = Maximum operating voltage device can withstand without damage at rated current (Imax).

I_{max} = Maximum fault current device can withstand without damage at rated voltage (Vmax).

P_{dtyp} =Maximum power dissipation when device is in the tripped state in 25℃ still air environment at rated voltage.

R_{min} = Minimum device resistance prior to tripping at 25℃.

R_{1max} = Maximum device resistance is measured one hour post reflow.

Test Procedures and Requirements

Test Item	Test Conditions	Accept / Reject Criteria
Resistance	In still air @ 25℃	$R_{min} \le R \le R_{1max}$
Time to Trip	Specified current, V_{max}, 25℃	T≤Maximum Time to Trip
Holding Current	30min, at I_H	No trip
Trip Cycle Life	V_{max}, I_{max}, 100cycles	No arcing or burning
Trip Endurance	V_{max}, 1 hour	No arcing or burning

@ SOCAY Electronics Corp., Ltd. 2024
Specifications are subject to change without notice.
Please refer to www.socay.com for current information.

Surface Mount Resettable PTCs

SCF0603RB Series

Physical Characteristics

Terminal Materials	Tin-Plated Nickle-copper
Soldering Zone	Meets EIA specification RS 186-9E and ANSI/J-STD-002 Category 3.

Environmental Specifications

Test Item	Test Conditions	Resistance Change
Passive Aging	85℃,1000 hours	±10%
Humidity Aging	85℃/85%RH.100 hours	±5%
Thermal Shock	MIL-STD-202, Method 107G +85℃/-40℃, 20 times	±33% typical resistance change
Solvent Resistance	MIL-STD-202, Method 215	No change
Vibration	ML-STD-883C, Test Condition A	No change

Thermal Derating Chart - I_H (A)

Model	Maximum Ambient Operating Temperature (℃)								
	-40	-20	0	25	40	50	60	70	85
SCF001-0603RB	0.014	0.0125	0.0115	0.010	0.0085	0.007	0.006	0.005	0.0035
SCF002-0603RB	0.028	0.025	0.023	0.020	0.017	0.014	0.012	0.010	0.007
SCF003-0603RB	0.042	0.038	0.035	0.030	0.026	0.021	0.018	0.015	0.011
SCF004-0603RB	0.056	0.050	0.046	0.040	0.034	0.028	0.024	0.020	0.014
SCF005-0603RB	0.070	0.063	0.058	0.050	0.043	0.035	0.030	0.025	0.018
SCF010-0603RB	0.140	0.125	0.115	0.100	0.085	0.070	0.060	0.050	0.035
SCF020-0603RB	0.280	0.250	0.230	0.200	0.170	0.140	0.120	0.100	0.070
SCF020-12-0603RB	0.280	0.250	0.230	0.200	0.170	0.140	0.120	0.100	0.070
SCF025-0603RB	0.350	0.310	0.290	0.250	0.210	0.180	0.150	0.130	0.090
SCF030-0603RB	0.420	0.380	0.350	0.300	0.260	0.210	0.180	0.150	0.110
SCF035-0603RB	0.470	0.440	0.390	0.350	0.300	0.270	0.240	0.200	0.140
SCF040-0603RB	0.540	0.500	0.450	0.400	0.340	0.310	0.270	0.230	0.160
SCF050-0603RB	0.670	0.630	0.560	0.500	0.430	0.390	0.340	0.290	0.200

@ SOCAY Electronics Corp., Ltd. 2024
Specifications are subject to change without notice.
Please refer to www.socay.com for current information.

Surface Mount Resettable PTCs

SCF0603RB Series

Soldering Parameters

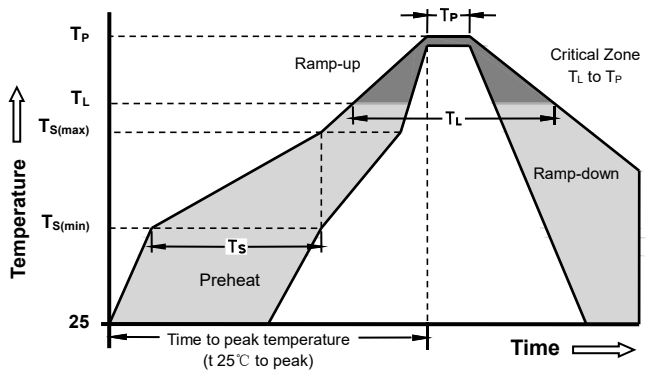

Profile Feature	Pb-Free Assembly
Average Ramp-Up Rate (T_S max to T_P)	3℃/second max.
Preheat : Temperature Min ($T_S$min) Temperature Max ($T_S$max) Time ($T_S$min to $T_S$max)	 150℃ 200℃ 60-120 seconds
Time maintained above: Temperature(T_L) Time (T_L)	 217℃ 60-150 seconds
Peak/Classification Temperature(T_P)	260℃
Time within 5 ℃ of actual peak temperature: Time (T_P)	30 seconds max.
Ramp-down Rate	3℃/ second max.
Time 25℃ to Peak Temperature	8 minutes max.

- *Recommended reflow methods: I_R, vapor phase oven, hot air oven, N2 environment for lead-free.*
- *Devices are not designed to be wave soldered to the bottom side of the board.*
- *Recommended maximum paste thickness is 0.25mm (0.010inch).*
- *Devices can be cleaned using standard industry methods and solvents.*
- *Soldering temperature profile meets RoHS leadfree process.*

Note 1: All temperature refer to topside of the package,measured on the package body surface.
Note 2: If reflow temperature exceed the recommended profile,devices may not meet the performance requirements.

Part Numbering

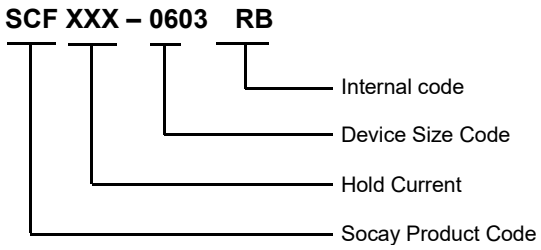

Recommended Solder Pad Layout Dimensions (Unit: mm)

The dimension in the table below provide the recommended pad layout for each SCF0603RB Series device.

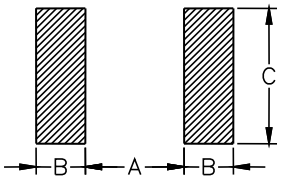

Device	A	B	C
0603 Series	0.8±0.1	1.0±0.1	1.0±0.1

@ SOCAY Electronics Corp., Ltd. 2024
Specifications are subject to change without notice.
Please refer to www.socay.com for current information.

Surface Mount Resettable PTCs

SCF0603RB Series

Product Dimensions (Unit: mm)

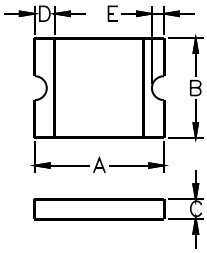

Part Number	A		B		C		D		E
	Min.	Max.	Min.	Max.	Min.	Max.	Min.	Max.	Max.
SCF001-0603RB	1.45	1.85	0.65	1.05	0.40	0.90	0.15	0.50	0.40
SCF002-0603RB	1.45	1.85	0.65	1.05	0.40	0.90	0.15	0.50	0.40
SCF003-0603RB	1.45	1.85	0.65	1.05	0.40	0.90	0.15	0.50	0.40
SCF004-0603RB	1.45	1.85	0.65	1.05	0.40	0.90	0.15	0.50	0.40
SCF005-0603RB	1.45	1.85	0.65	1.05	0.40	0.75	0.15	0.50	0.40
SCF010-0603RB	1.45	1.85	0.65	1.05	0.40	0.75	0.15	0.50	0.40
SCF020-0603RB	1.45	1.85	0.65	1.05	0.40	0.75	0.15	0.50	0.40
SCF020-12-0603RB	1.45	1.85	0.65	1.05	0.40	1.00	0.15	0.50	0.40
SCF025-0603RB	1.45	1.85	0.65	1.05	0.40	0.75	0.15	0.50	0.40
SCF030-0603RB	1.45	1.85	0.65	1.05	0.40	0.75	0.15	0.50	0.40
SCF035-0603RB	1.45	1.85	0.65	1.05	0.40	0.75	0.15	0.50	0.40
SCF040-0603RB	1.45	1.85	0.65	1.05	0.50	1.20	0.15	0.50	0.40
SCF050-0603RB	1.45	1.85	0.65	1.05	0.50	1.20	0.15	0.50	0.40

Packaging Quantity

Part Number	Quantity	Part Number	Quantity
SCF001-0603RB	4000 PCS	SCF020-12-0603RB	5000 PCS
SCF002-0603RB	4000 PCS	SCF025-0603RB	5000 PCS
SCF003-0603RB	5000 PCS	SCF030-0603RB	5000 PCS
SCF004-0603RB	5000 PCS	SCF035-0603RB	5000 PCS
SCF005-0603RB	5000 PCS	SCF040-0603RB	4000 PCS
SCF010-0603RB	5000 PCS	SCF050-0603RB	4000 PCS
SCF020-0603RB	5000 PCS	--	--

@ SOCAY Electronics Corp., Ltd. 2024
Specifications are subject to change without notice.
Please refer to www.socay.com for current information.

Surface Mount Resettable PTCs

SCF0603RB Series

Tape Specifications (Unit: mm)

Tape Component Dimensions

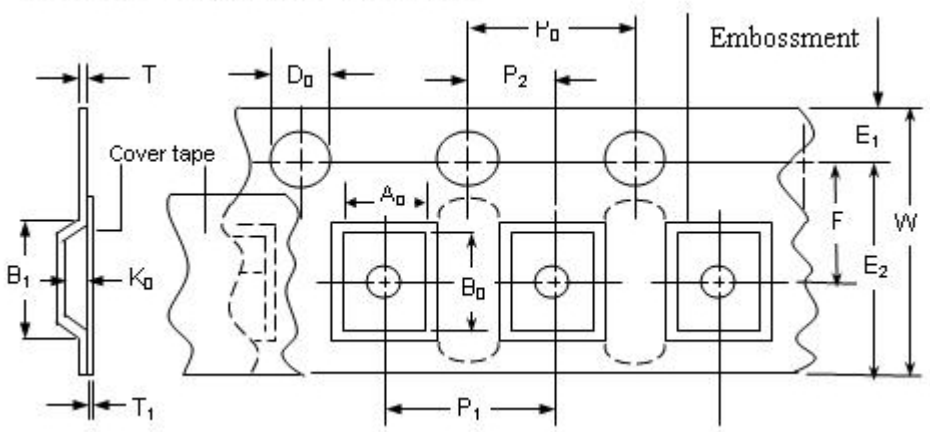

Symbol	Dimensions
W	8.00±0.10
P_0	4.00±0.10
P_1	4.00±0.10
P_2	2.00±0.05
A_0	0.95±0.10
B_0	1.85±0.05
D_0	1.55±0.05
F	3.50±0.05
E_1	1.75±0.10
T	0.20±0.02
Leader min.	390
Trailer min.	160

Reel Specifications (Unit: mm)

Reel Dimensions

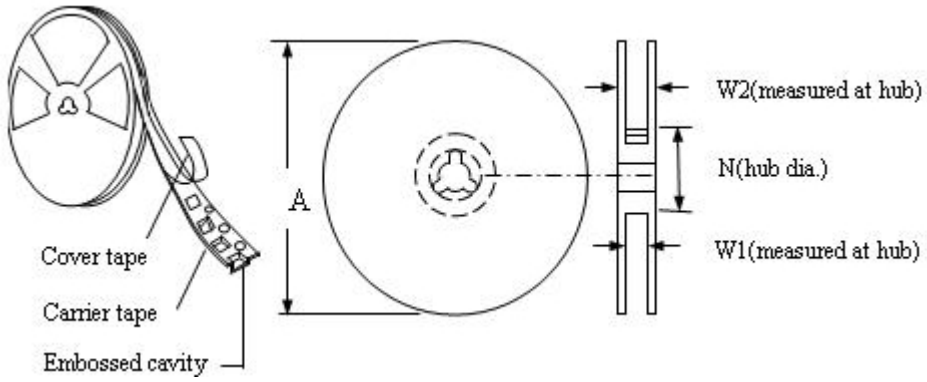

Symbol	Dimensions
A	178±1.0
N	59±1.0
W1	8.5+1.0/-0.2
W2	12.0±1.0

@ SOCAY Electronics Corp., Ltd. 2024
Specifications are subject to change without notice.
Please refer to www.socay.com for current information.

Surface Mount Resettable PTCs

SCF0603RB Series

Warning

- Operation beyond the specified maximum ratings or improper use may result in damage and possible electrical arcing and/or flame.
- The electrical resistance and electrical performance specified in the specification are all tested on the test board designated after a reflow soldering. If there is a secondary soldering or other thermal processes, the performance may be attenuated.
- The holding current of PTC varies at different temperatures, please refer to the specifications and the actual ambient temperature for selection.
- PTC is designed to protect the occasional overcurrent or overheating failure phenomenon. Long-term or frequent failures will reduce the holding current of the product.
- The PTC soldering process is reflow soldering. The soldering process can refer to the temperature curve recommended in the specification. Manual soldering of PTC is prohibited. The use of hot air gun soldering of adjacent components will also affect the performance of PTC.
- PTC is a heat-sensitive component, avoid installing heat source components around it, and avoid installing it in an environment that is compressed or affects its thermal expansion.
- During installation or use, the PTC is forbidden to be mechanically damaged. It is not recommended to use liquid cleaning products containing organic solvents, which may affect the solder ability of PTC.

@ SOCAY Electronics Corp., Ltd. 2024
Specifications are subject to change without notice.
Please refer to www.socay.com for current information.