SOCAY

HF RoHS

Surface Mount Resettable PTCs

SCF1812RB Series

Features

- RoHS Compliant & Halogen Free
- Faster tripping, 1812 Dimension, Surface mountable, Solid state
- Operation Current: 0.10A ~ 3.00A
- Maximum Voltage: 6V ~ 60Vdc
- Operating Temperature: -40℃ ~ + 85℃

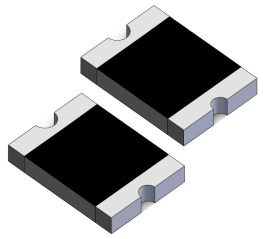

Electrical Characteristics

Part Number	Hold Current	Trip Current	Rated Voltage	Max Current	Typical Power	Maximum Time To Trip		Resistance	
	I_{hold} (A)	I_{trip} (A)	V_{max} (Vdc)	I_{max} (A)	$P_{dtyp.}$ (W)	Current (A)	Time (Sec.)	R_{min} (Ω)	R_{1max} (Ω)
SCF010-1812RB	0.10	0.30	60.0	100	0.8	0.50	1.50	0.750	15.000
SCF014-1812RB	0.14	0.34	60.0	100	0.8	1.50	0.15	0.650	6.000
SCF020-1812RB	0.20	0.40	30.0	100	0.8	8.0	0.02	0.350	5.000
SCF020-60-1812RB	0.20	0.40	60.0	100	0.8	8.0	0.02	0.350	5.000
SCF030-1812RB	0.30	0.60	30.0	100	0.8	8.0	0.10	0.250	3.000
SCF030-60-1812RB	0.30	0.60	60.0	40	0.8	8.0	0.10	0.250	3.800
SCF035-1812RB	0.35	0.70	16.0	100	0.8	8.0	0.10	0.200	2.500
SCF035-30-1812RB	0.35	0.70	30.0	100	0.8	8.0	0.10	0.200	2.500
SCF050-1812RB	0.50	1.00	15.0	100	0.8	8.0	0.15	0.150	1.000
SCF050-24-1812RB	0.50	1.00	24.0	100	0.8	8.0	0.15	0.150	1.000
SCF050-30-1812RB	0.50	1.00	30.0	100	0.8	8.0	0.15	0.150	1.000
SCF050-60-1812RB	0.50	1.00	60.0	40	0.8	8.0	0.15	0.150	1.400
SCF075-1812RB	0.75	1.50	13.2	100	0.8	8.0	0.20	0.090	0.450
SCF075-24-1812RB	0.75	1.50	24.0	100	0.8	8.0	0.20	0.090	0.450
SCF075-33-1812RB	0.75	1.50	33.0	100	0.8	8.0	0.20	0.090	0.450
SCF110-1812RB	1.10	2.20	8.0	100	0.8	8.0	0.30	0.050	0.250
SCF110-16-1812RB	1.10	2.20	16.0	100	0.8	8.0	0.30	0.050	0.250
SCF110-24-1812RB	1.10	2.20	24.0	100	0.8	8.0	0.30	0.050	0.250
SCF110-33-1812RB	1.10	2.20	33.0	100	0.8	8.0	0.30	0.050	0.250
SCF125-1812RB	1.25	2.50	8.0	100	0.8	8.0	0.40	0.050	0.200
SCF125-16-1812RB	1.25	2.50	16.0	100	0.8	8.0	0.40	0.050	0.200
SCF150-1812RB	1.50	3.00	8.0	100	0.8	8.0	0.50	0.040	0.160
SCF150-16-1812RB	1.50	3.00	16.0	100	0.8	8.0	0.50	0.040	0.160
SCF150-24-1812RB	1.50	3.00	24.0	100	0.8	8.0	0.50	0.040	0.160
SCF150-30-1812RB	1.50	3.00	30.0	40	0.8	8.0	0.50	0.040	0.180
SCF160-1812RB	1.60	2.80	8.0	100	0.8	8.0	1.00	0.030	0.130
SCF160-12-1812RB	1.60	2.80	12.0	40	1.0	8.0	1.00	0.030	0.130
SCF160-16-1812RB	1.60	2.80	16	40	1.0	8.0	1.00	0.030	0.130

@ SOCAY Electronics Corp., Ltd. 2025
Specifications are subject to change without notice.
Please refer to www.socay.com for current information.

Surface Mount Resettable PTCs

SCF1812RB Series

Electrical Characteristics (Continue)

Part Number	Hold Current	Trip Current	Rated Voltage	Max Current	Typical Power	Maximum Time To Trip		Resistance	
	I_{hold} (A)	I_{trip} (A)	V_{max} (Vdc)	I_{max} (A)	$P_{dtyp.}$ (W)	Current (A)	Time (Sec.)	R_{min} (Ω)	R_{1max} (Ω)
SCF200-1812RB	2.00	4.00	8.0	100	0.8	8.0	2.00	0.020	0.100
SCF200-12-1812RB	2.00	4.00	12.0	100	0.8	8.0	2.00	0.020	0.100
SCF200-16-1812RB	2.00	4.00	16.0	100	0.8	8.0	2.00	0.020	0.100
SCF200-24-1812RB	2.00	4.00	24.0	100	0.8	8.0	2.00	0.020	0.120
SCF260-1812RB	2.60	5.00	8.0	100	1.0	8.0	2.50	0.015	0.050
SCF260-12-1812RB	2.60	5.00	12.0	100	1.0	8.0	2.50	0.015	0.060
SCF260-16-1812RB	2.60	5.00	16.0	100	1.0	8.0	2.50	0.015	0.060
SCF300-1812RB	3.00	5.00	6.0	100	1.0	8.0	4.00	0.012	0.040
SCF300-12-1812RB	3.00	5.00	12.0	40	0.8	8.0	4.00	0.012	0.050
SCF300-16-1812RB	3.00	5.00	16.0	40	0.8	8.0	4.00	0.012	0.045

I_{hold} = Hold Current. Maximum current device will not trip in 25℃ still air.

I_{trip} = Trip Current. Minimum current at which the device will always trip in 25℃ still air.

V_{max} = Maximum operating voltage device can withstand without damage at rated current (Imax).

I_{max} = Maximum fault current device can withstand without damage at rated voltage (Vmax).

P_{dtyp} =Maximum power dissipation when device is in the tripped state in 25℃ still air environment at rated voltage.

R_{min} = Minimum device resistance prior to tripping at 25℃.

R_{1max} = Maximum device resistance is measured one hour post reflow.

Test Procedures and Requirements

Test Item	Test Conditions	Accept/Reject Criteria
Resistance	In still air at 25℃	$R_{min} \le R \le R_{1max}$
Time to Trip	Specified current, V_{max}, 25℃	T≤Maximum Time to Trip
Holding Current	30min, at I_H	No trip
Trip Cycle Life	V_{max}, I_{max}, 100cycles	No arcing or burning
Trip Endurance	V_{max}, 1 hour	No arcing or burning

Physical Characteristics

Terminal Materials	Tin-Plated Nickle-copper
Soldering Zone	Meets EIA specification RS 186-9E and ANSI/J-STD-002 Category 3.

@ SOCAY Electronics Corp., Ltd. 2025
Specifications are subject to change without notice.
Please refer to www.socay.com for current information.

Surface Mount Resettable PTCs

SCF1812RB Series

Environmental Specifications

Test Item	Test Conditions	Resistance Change
Passive Aging	85℃,1000 hours	±10%
Humidity Aging	85℃/85%RH.100 hours	±5%
Thermal Shock	MIL-STD-202, Method 107G +85℃/-40℃, 20 times	±33% typical resistance change
Solvent Resistance	MIL-STD-202, Method 215	No change
Vibration	ML-STD-883C, Test Condition A	No change

Thermal Derating Chart - I_H (A)

Model	Maximum Ambient Operating Temperature (℃)								
	-40	-20	0	25	40	50	60	70	85
SCF010-1812RB	0.16	0.14	0.12	0.10	0.08	0.07	0.06	0.05	0.03
SCF014-1812RB	0.23	0.19	0.17	0.14	0.12	0.10	0.09	0.08	0.06
SCF020-1812RB	0.29	0.26	0.23	0.20	0.17	0.15	0.14	0.12	0.10
SCF020-60-1812RB	0.29	0.26	0.23	0.20	0.17	0.15	0.14	0.12	0.10
SCF030-1812RB	0.44	0.39	0.35	0.30	0.26	0.23	0.21	0.17	0.15
SCF030-60-1812RB	0.44	0.39	0.35	0.30	0.26	0.23	0.21	0.17	0.15
SCF035-1812RB	0.51	0.46	0.41	0.35	0.30	0.27	0.25	0.21	0.17
SCF035-30-1812RB	0.51	0.46	0.41	0.35	0.30	0.27	0.25	0.21	0.17
SCF050-1812RB	0.59	0.57	0.55	0.50	0.45	0.43	0.35	0.30	0.23
SCF050-24-1812RB	0.59	0.57	0.55	0.50	0.45	0.43	0.35	0.30	0.23
SCF050-30-1812RB	0.59	0.57	0.55	0.50	0.45	0.43	0.35	0.30	0.23
SCF050-60-1812RB	0.59	0.57	0.55	0.50	0.45	0.43	0.35	0.30	0.23
SCF075-1812RB	1.10	0.99	0.87	0.75	0.63	0.57	0.49	0.45	0.35
SCF075-24-1812RB	1.10	0.99	0.87	0.75	0.63	0.57	0.49	0.45	0.35
SCF075-33-1812RB	1.10	0.99	0.87	0.75	0.63	0.57	0.49	0.45	0.35
SCF110-1812RB	1.60	1.45	1.28	1.10	0.92	0.83	0.71	0.66	0.52
SCF110-16-1812RB	1.60	1.45	1.28	1.10	0.92	0.83	0.71	0.66	0.52
SCF110-24-1812RB	1.60	1.45	1.28	1.10	0.92	0.83	0.71	0.66	0.52
SCF110-33-1812RB	1.60	1.45	1.28	1.10	0.92	0.83	0.71	0.66	0.52
SCF125-1812RB	2.00	1.75	1.52	1.25	1.00	0.95	0.90	0.75	0.53
SCF125-16-1812RB	2.00	1.75	1.52	1.25	1.00	0.95	0.90	0.75	0.53
SCF150-1812RB	2.30	2.05	1.77	1.50	1.23	1.09	0.95	0.82	0.61
SCF150-16-1812RB	2.30	2.05	1.77	1.50	1.23	1.09	0.95	0.82	0.61
SCF150-24-1812RB	2.30	2.05	1.77	1.50	1.23	1.09	0.95	0.82	0.61
SCF150-30-1812RB	2.30	2.05	1.77	1.50	1.23	1.09	0.95	0.82	0.61

@ SOCAY Electronics Corp., Ltd. 2025
Specifications are subject to change without notice.
Please refer to www.socay.com for current information.

Surface Mount Resettable PTCs

SCF1812RB Series

Thermal Derating Chart - I_H (A)

Model	Maximum Ambient Operating Temperature (℃)								
	-40	-20	0	25	40	50	60	70	85
SCF160-1812RB	2.45	2.15	1.89	1.60	1.34	1.25	1.15	0.96	0.79
SCF160-12-1812RB	2.45	2.15	1.89	1.60	1.34	1.25	1.15	0.96	0.79
SCF160-16-1812RB	2.45	2.15	1.89	1.60	1.34	1.25	1.15	0.96	0.79
SCF200-1812RB	2.89	2.61	2.30	2.00	1.75	1.66	1.45	1.39	1.19
SCF200-12-1812RB	2.89	2.61	2.30	2.00	1.75	1.66	1.45	1.39	1.19
SCF200-16-1812RB	2.89	2.61	2.30	2.00	1.75	1.66	1.45	1.39	1.19
SCF200-24-1812RB	2.89	2.61	2.30	2.00	1.75	1.66	1.45	1.39	1.19
SCF260-1812RB	3.76	3.39	2.99	2.60	2.28	2.16	1.89	1.81	1.55
SCF260-12-1812RB	3.38	3.05	2.69	2.60	2.05	1.94	1.70	1.63	1.39
SCF260-16-1812RB	3.38	3.05	2.69	2.60	2.05	1.94	1.70	1.63	1.39
SCF300-1812RB	4.34	3.92	3.45	3.00	2.63	2.49	2.18	2.09	1.79
SCF300-12-1812RB	4.34	3.92	3.45	3.00	2.63	2.49	2.18	2.09	1.79
SCF300-16-1812RB	4.34	3.92	3.45	3.00	2.63	2.49	2.18	2.09	1.79

Soldering Parameters

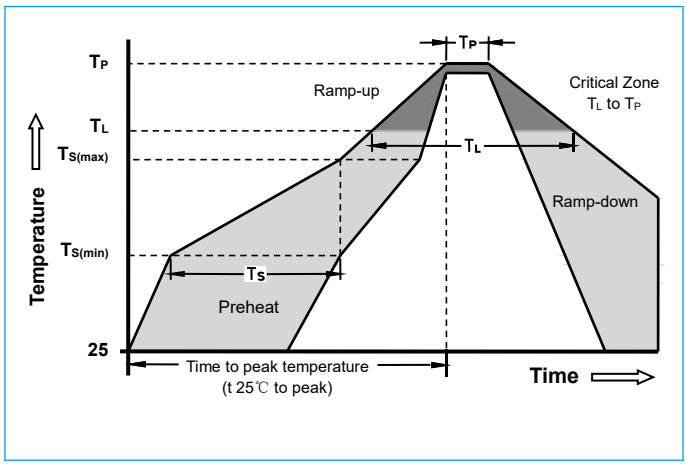

Profile Feature	Pb-Free Assembly
Average Ramp-Up Rate (T_S max to T_P)	3℃/second max.
Preheat : Temperature Min ($T_S$min) Temperature Max ($T_S$max) Time ($T_S$min to $T_S$max)	 150℃ 200℃ 60-120 seconds
Time maintained above: Temperature(T_L) Time (T_L)	 217℃ 60-150 seconds
Peak/Classification Temperature(T_P)	260℃
Time within 5 ℃ of actual peak temperature: Time (T_P)	30 seconds max.
Ramp-down Rate	3℃/ second max.
Time 25℃ to Peak Temperature	8 minutes max.

- *Recommended reflow methods: IR, vapor phase oven, hot air oven, N2 environment for lead-free.*
- *Devices are not designed to be wave soldered to the bottom side of the board.*
- *Recommended maximum paste thickness is 0.25mm (0.010inch).*
- *Devices can be cleaned using standard industry methods and solvents.*
- *Soldering temperature profile meets RoHS leadfree process.*

Note 1: All temperature refer to topside of the package,measured on the package body surface.
Note 2: If reflow temperature exceed the recommended profile,devices may not meet the performance requirements.

@ SOCAY Electronics Corp., Ltd. 2025
Specifications are subject to change without notice.
Please refer to www.socay.com for current information.

Surface Mount Resettable PTCs

SCF1812RB Series

Part Numbering

SCF XXX – XX – 1812 RB

- Internal Code
- Device Size Code
- Rated Voltage
- Hold Current
- Socay Product Code

Recommended Solder Pad Layout Dimensions (Unit: mm)

The dimension in the table below provide the recommended pad layout for each SCF1812RB Series device.

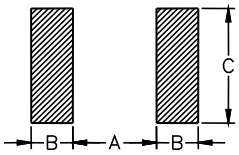

Device	A	B	C
1812 Series	3.2±0.1	1.78±0.1	3.2±0.1

Product Dimensions (Unit: mm)

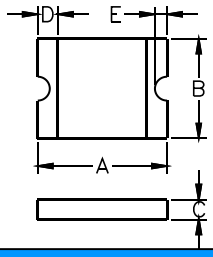

Part Number	A		B		C		D	E
	Min.	Max.	Min.	Max.	Min.	Max.	Min.	Min.
SCF010-1812RB	4.37	4.73	3.07	3.41	0.50	1.00	0.30	0.15
SCF014-1812RB	4.37	4.73	3.07	3.41	0.50	1.10	0.30	0.15
SCF020-1812RB	4.37	4.73	3.07	3.41	0.50	1.00	0.30	0.15
SCF020-60-1812RB	4.37	4.73	3.07	3.41	0.50	1.00	0.30	0.25
SCF030-1812RB	4.37	4.73	3.07	3.41	0.50	1.00	0.30	0.15
SCF030-60-1812RB	4.37	4.73	3.07	3.41	0.50	1.00	0.30	0.25
SCF035-1812RB	4.37	4.73	3.07	3.41	0.50	1.00	0.30	0.25
SCF035-30-1812RB	4.37	4.73	3.07	3.41	0.50	1.00	0.30	0.25

@ SOCAY Electronics Corp., Ltd. 2025
Specifications are subject to change without notice.
Please refer to www.socay.com for current information.

Surface Mount Resettable PTCs

SCF1812RB Series

Product Dimensions (Unit: mm) (Continue)

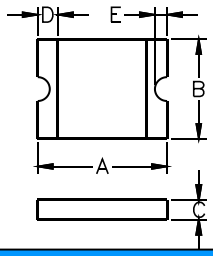

Part Number	A		B		C		D	E
	Min.	Max.	Min.	Max.	Min.	Max.	Min.	Min.
SCF050-1812RB	4.37	4.73	3.07	3.41	0.40	0.90	0.30	0.15
SCF050-24-1812RB	4.37	4.73	3.07	3.41	0.40	0.90	0.30	0.15
SCF050-30-1812RB	4.37	4.73	3.07	3.41	0.40	1.00	0.30	0.15
SCF050-60-1812RB	4.37	4.73	3.07	3.41	0.50	1.40	0.30	0.15
SCF075-1812RB	4.37	4.73	3.07	3.41	0.40	0.90	0.30	0.15
SCF075-24-1812RB	4.37	4.73	3.07	3.41	0.50	1.20	0.30	0.15
SCF075-33-1812RB	4.37	4.73	3.07	3.41	0.60	1.20	0.30	0.15
SCF110-1812RB	4.37	4.73	3.07	3.41	0.40	0.90	0.30	0.15
SCF110-16-1812RB	4.37	4.73	3.07	3.41	0.40	0.90	0.30	0.15
SCF110-24-1812RB	4.37	4.73	3.07	3.41	0.60	1.30	0.30	0.15
SCF110-33-1812RB	4.37	4.73	3.07	3.41	0.70	1.70	0.30	0.15
SCF125-1812RB	4.37	4.73	3.07	3.41	0.30	0.90	0.30	0.15
SCF125-16-1812RB	4.37	4.73	3.07	3.41	0.50	1.20	0.30	0.15
SCF150-1812RB	4.37	4.73	3.07	3.41	0.30	0.90	0.30	0.15
SCF150-16-1812RB	4.37	4.73	3.07	3.41	0.50	1.20	0.30	0.15
SCF150-24-1812RB	4.37	4.73	3.07	3.41	0.80	1.70	0.30	0.15
SCF150-30-1812RB	4.37	4.73	3.07	3.41	1.00	2.20	0.30	0.25
SCF160-1812RB	4.37	4.73	3.07	3.41	0.30	0.80	0.30	0.15
SCF160-12-1812RB	4.37	4.73	3.07	3.41	0.50	1.10	0.30	0.25
SCF160-16-1812RB	4.37	4.73	3.07	3.41	0.50	1.10	0.30	0.25
SCF200-1812RB	4.37	4.73	3.07	3.41	0.40	1.20	0.30	0.15
SCF200-12-1812RB	4.37	4.73	3.07	3.41	0.40	1.20	0.30	0.15
SCF200-16-1812RB	4.37	4.73	3.07	3.41	0.50	1.20	0.30	0.15
SCF200-24-1812RB	4.37	4.73	3.07	3.41	0.80	1.60	0.30	0.25
SCF260-1812RB	4.37	4.73	3.07	3.41	0.50	1.20	0.30	0.15
SCF260-12-1812RB	4.37	4.73	3.07	3.41	0.60	1.50	0.30	0.15
SCF260-16-1812RB	4.37	4.73	3.07	3.41	0.80	1.80	0.30	0.15
SCF300-1812RB	4.37	4.73	3.07	3.41	0.50	1.50	0.30	0.15
SCF300-12-1812RB	4.37	4.73	3.07	3.41	0.90	2.00	0.30	0.25
SCF300-16-1812RB	4.37	4.73	3.07	3.41	0.90	1.80	0.30	0.25

@ SOCAY Electronics Corp., Ltd. 2025
Specifications are subject to change without notice.
Please refer to www.socay.com for current information.

Surface Mount Resettable PTCs

SCF1812RB Series

Packaging Quantity

Part Number	Quantity	Part Number	Quantity
SCF010-1812RB	1500 PCS	SCF125-1812RB	2000 PCS
SCF014-1812RB	1500 PCS	SCF125-16-1812RB	1500 PCS
SCF020-1812RB	1500 PCS	SCF150-1812RB	2000 PCS
SCF020-60-1812RB	1500 PCS	SCF150-16-1812RB	1500 PCS
SCF030-1812RB	1500 PCS	SCF150-24-1812RB	1500 PCS
SCF030-60-1812RB	1500 PCS	SCF150-30-1812RB	1500 PCS
SCF035-1812RB	1500 PCS	SCF160-1812RB	2000 PCS
SCF035-30-1812RB	1500 PCS	SCF160-12-1812RB	1500 PCS
SCF050-1812RB	2000 PCS	SCF160-16-1812RB	1500 PCS
SCF050-24-1812RB	2000 PCS	SCF200-1812RB	2000 PCS
SCF050-30-1812RB	2000 PCS	SCF200-12-1812RB	1500 PCS
SCF050-60-1812RB	1500 PCS	SCF200-16-1812RB	1500 PCS
SCF075-1812RB	2000 PCS	SCF200-24-1812RB	1500 PCS
SCF075-24-1812RB	2000 PCS	SCF260-1812RB	1500 PCS
SCF075-33-1812RB	1500 PCS	SCF260-12-1812RB	1500 PCS
SCF110-1812RB	2000 PCS	SCF260-16-1812RB	1500 PCS
SCF110-16-1812RB	2000 PCS	SCF300-1812RB	1500 PCS
SCF110-24-1812RB	1500 PCS	SCF300-12-1812RB	1500 PCS
SCF110-33-1812RB	1500 PCS	SCF300-16-1812RB	1500 PCS

Tape Specifications (Unit: mm)

Tape Component Dimensions

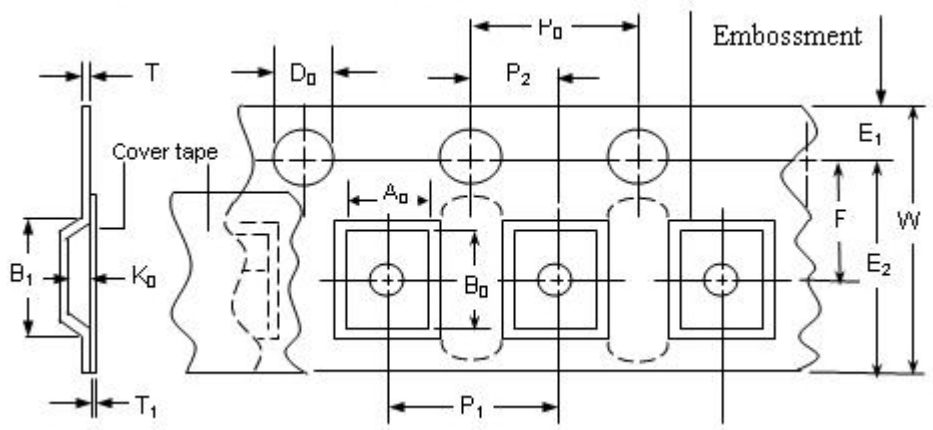

Symbol	Dimensions
W	12.00+0.30/-0
P_0	8.0±0.10
P_1	4.0±0.10
P_2	2.0±0.10
A_0	3.50±0.10
B_0	4.90±0.10
D_0	1.50+0.10/-0
F	5.50±0.05
E_1	1.75±0.10
T	0.30±0.10
Leader min.	390
Trailer min.	160

@ SOCAY Electronics Corp., Ltd. 2025
Specifications are subject to change without notice.
Please refer to www.socay.com for current information.

Surface Mount Resettable PTCs

SCF1812RB Series

Reel Specifications (Unit: mm)

Reel Dimensions

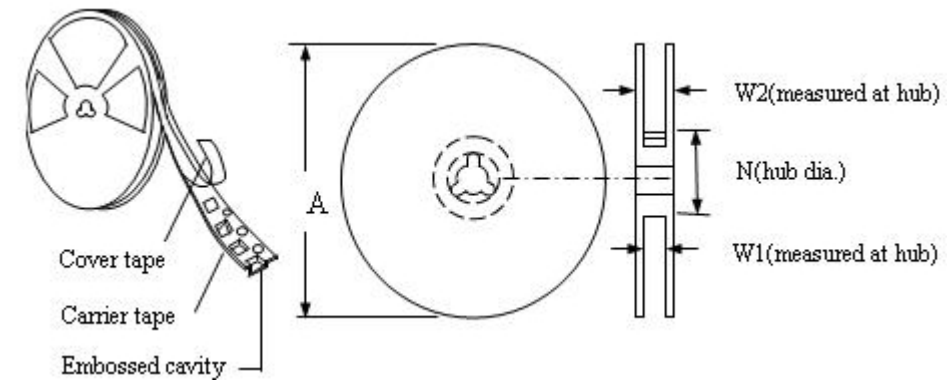

Symbol	Dimensions
A	178±1.0
N	59±1.0
W1	8.5+1.0/-0.2
W2	12.0±1.0

Warning

- Operation beyond the specified maximum ratings or improper use may result in damage and possible electrical arcing and/or flame.
- The electrical resistance and electrical performance specified in the specification are all tested on the test board designated after a reflow soldering. If there is a secondary soldering or other thermal processes, the performance may be attenuated.
- The holding current of PTC varies at different temperatures, please refer to the specifications and the actual ambient temperature for selection.
- PTC is designed to protect the occasional overcurrent or overheating failure phenomenon. Long-term or frequent failures will reduce the holding current of the product.
- The PTC soldering process is reflow soldering. The soldering process can refer to the temperature curve recommended in the specification. Manual soldering of PTC is prohibited. The use of hot air gun soldering of adjacent components will also affect the performance of PTC.
- PTC is a heat-sensitive component, avoid installing heat source components around it, and avoid installing it in an environment that is compressed or affects its thermal expansion.
- During installation or use, the PTC is forbidden to be mechanically damaged. It is not recommended to use liquid cleaning products containing organic solvents, which may affect the solder ability of PTC.

@ SOCAY Electronics Corp., Ltd. 2025
Specifications are subject to change without notice.
Please refer to www.socay.com for current information.