NO.	ECN NO.	DESCRIPTION	DATE

客户图

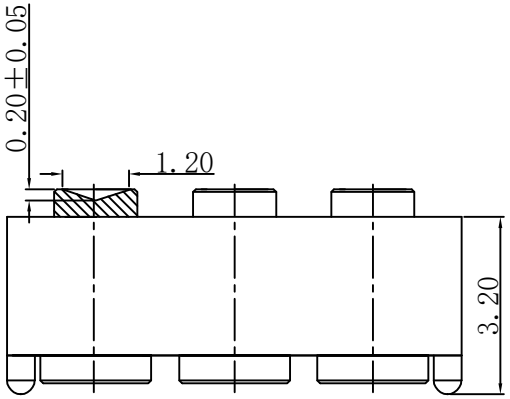

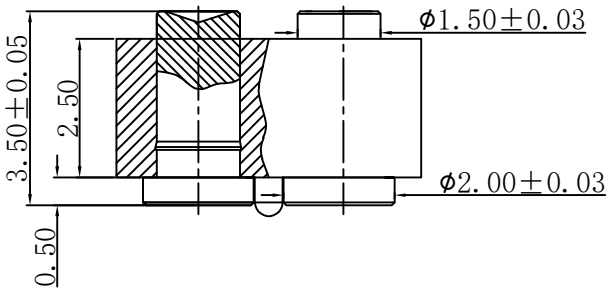

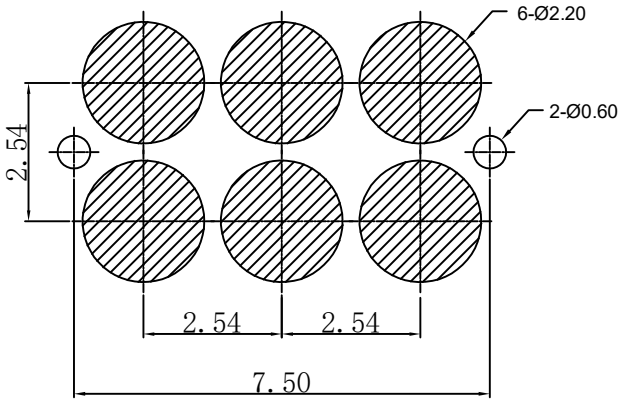

RECOMMENDED PCB LAYOUT

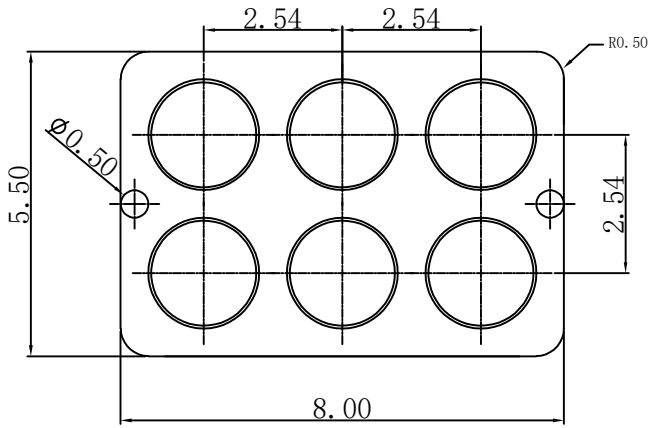

Note:

1: Material(材料）:
   Housing: PA46（胶芯：PA46）
   Pin: Brass C3604（针体：黄铜 C3604）

2: Plating(电镀）:
   Pin: 3u' Au over 50~80u' Ni
   针体：镀金3u'，镍底50~80u'。

3: Electrical(电气特性）:
   Insulation Resistance: 1,000MΩ minimum.
   (绝缘电阻：1,000MΩ以上）
   Dielectric Withstand Voltage: 500VAC/minute.
   (抗击电压：500VAC/minute）

4: WorkTemperture(工作环境):
   Withstanding Higt Temperature: 280℃
   Operational Temperature: －40℃~ ＋85℃

深圳市鑫扬泽电子有限公司
HTTP://WWW.XYZPOGOPIN.COM
TEL:0755-28773277 FAX:0755-28891353

SCALE:	N/A	UNIT	mm
SHEET:	1 of 1	PROJECTION	
DATE:	2023.10.10	VER.	D.0

THE UNMARKED TOLERANCE ARE AS BELOW :

LENGTH		ANGLE	
X.XX	±0.05mm	X.XX	±0.50°
X.X	±0.10mm	X.X	±1.00°
X.	±0.20mm	X.	±2.00°

DESIGNED BY:		DWG. NO.	YZ92015035T-06025-02
CHECKED BY:		TITLE:	Pogo pin连接器
APPROVED BY:			