PRODUCT SPECIFICATION

Model No.: GS3922A/CX-X

Descriptions & Features:
■0.39Inch (10mm) digit height, Double Digit SMD Display
■Case mold type.
■RoHS compliant.
■Low current operation
■Low power consumption.
■Easy mounting on P.C. board or socket.

CUSTOMER APPROVED SIGNATURES	APPROVED BY	CHECKED BY	PREPARED BY

GUANGCAI DISPLAY TECHNOLOGY CO.,LTD

ADD: No. 167,Shengshan Road, Yuecheng District, Shaoxing City, Zhejiang Province

Tel: +86-575-88626657

Fax: +86-575-88649799

E-mail: Sales@smddisplay.com (General)

Model No.: GS3922A/CX-X

■ -X: REF Surface

Color / Number	B	G
REF Surface Color	○ Black	○ Gray

■ Mechanical Dimensions

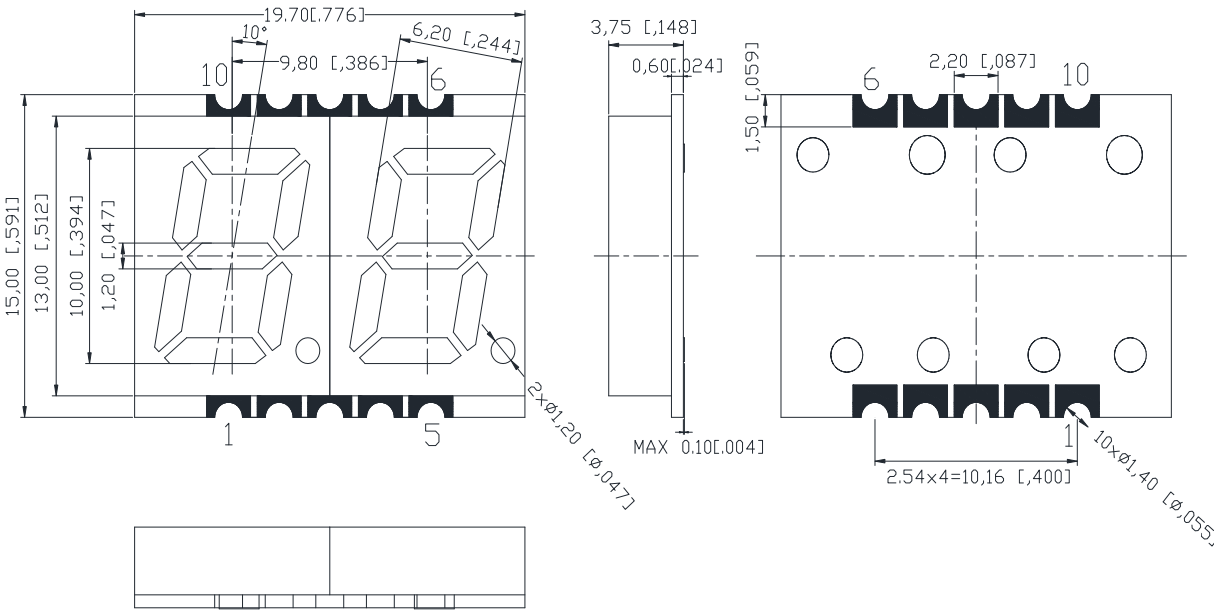

Notes:

1. . All dimensions are in millimeters (inches)
2. Dimension in millimeter [inch], tolerance is ±0.25 [.010] and angle is ±1° unless otherwise noted.
3. Bending≤Length*1%.
4. The specifications,characteristics and technical data described in the datasheet are subject to change without prior notice.
5. The drawing is different from the actual one, please refer to the sample.

Model No.: GS3922A/CX-X

■All Light On Segments Feature & Pad Position

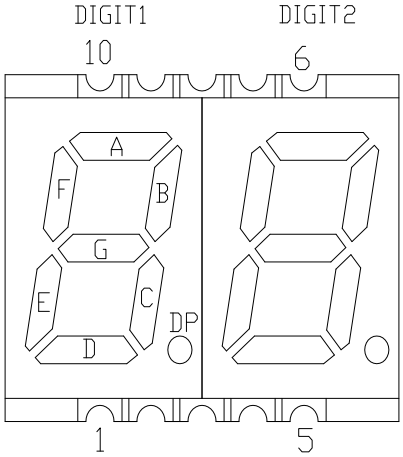

■ Internal Circuit Diagrams

GS3922AX

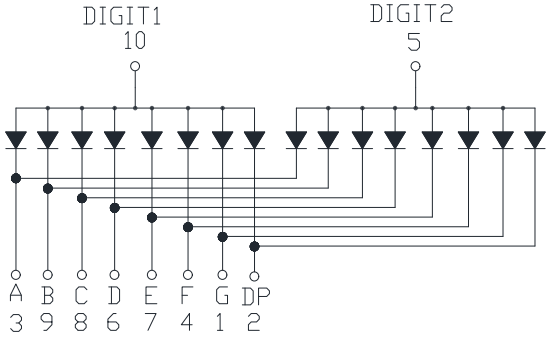

GS3922CX

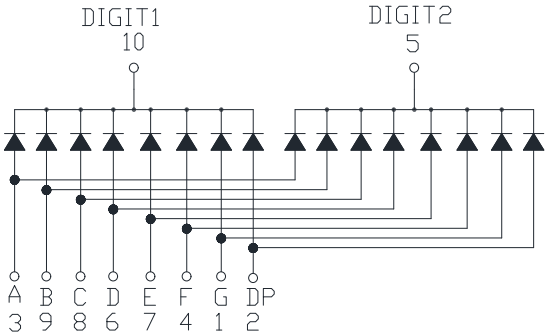

Model No.: GS3922A/CX-X

■ Absolute maximum ratings

(Ta=25℃)

Parameter	Symbol	Test Condition	Value		Unit
			Min	Max	
Reverse Voltage	VR	IR=30	5	—	V
Forward Current	IF	—	—	30	mA
Power Dissipation	Pd	—	—	100	mW
Pulse Current	Ipeak	Duty=0.1mS,1KHz	—	150	mA
Operating Temperature	Topr	—	-40	+85	℃
Storage Temperature	Tstr	—	-40	+85	℃

■ Electrical-Optical Characteristics

● Color Code & Chip Characteristics:(Test Condition:IF=10mA) (Ta=25℃)

Emitting Color		Dice Material	Peak Wave Length(λ_P)	Dominant Wavelength(λd)	Spectral Line halfwidth ($\Delta\lambda 1/2$)	Forward Voltage(VF) Unit:V		Luminous Intensity (Iv) Unit:mcd
						Typ	Max	
Ultra brightness								
R	Red	AlGaInP	660nm	645nm	20nm	2.00	2.50	20~50
SR	Orange	AlGaInP	632nm	625nm	20nm	2.00	2.50	40~85
A	Amber	AlGaInP	612nm	605nm	20nm	2.00	2.50	30~105
Y	Yellow	AlGaInP	592nm	590nm	20nm	2.00	2.50	30~135
G	Yellow Green	AlGaInP	572nm	570nm	30nm	2.00	2.50	20~60
PG	Pure Green	InGaN	*	520nm	36nm	3.00	3.80	350~450
B	Blue	InGaN/GaN	*	460nm	30nm	3.00	3.80	120~180
W	White	InGaN/GaN	X=0.29,Y=0.30		CCT:9500K	3.00	3.80	60~120~180
Segment-to-Segment Luminous Intensity ratio(Iv-M) 1.5:1								

Note:

1.Luminous Intensity is based on the Guangcai standards.

Model No.: GS3922A/CX-X

■ IR Reflow Temperature / Time :

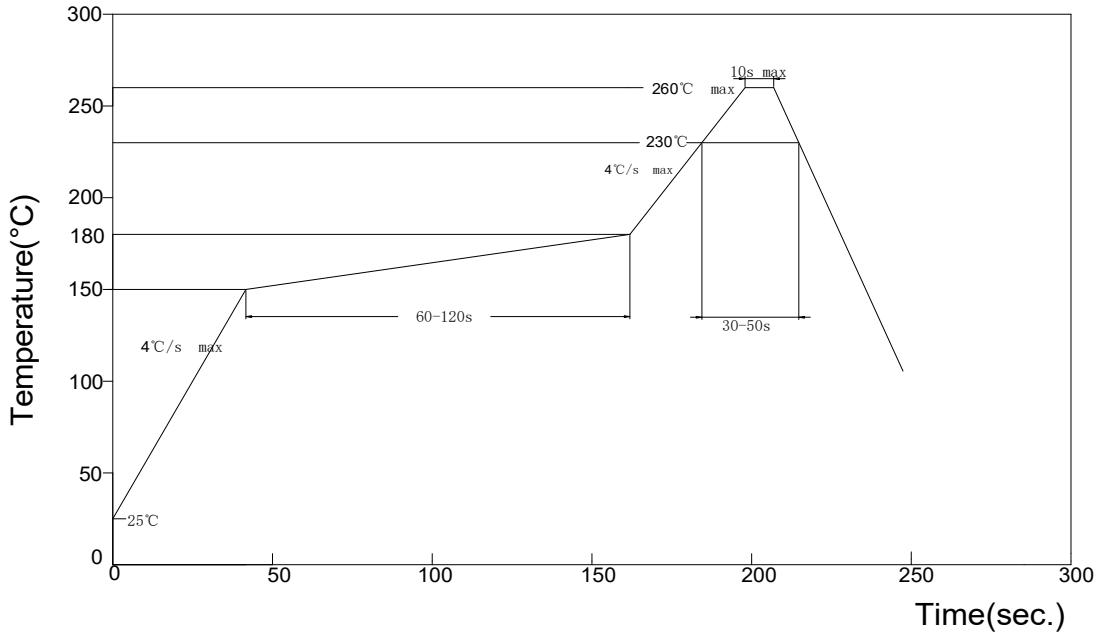

NOTES:

1.We recommend the reflow femperature 245℃（+/-5℃）。The maximun soldering temperature shoulc limited to 260℃。

2.Don't cause stress to the epoxy resin while it is exposed to high temperature。

3.Number of reflow process shall be 2 times or less.

■ Soldering Pad Size

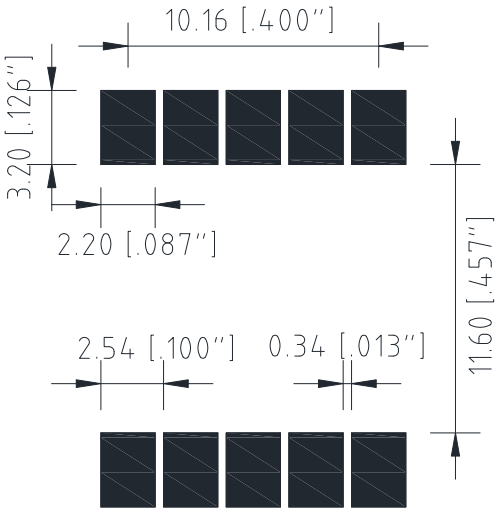

Model No.: GS3922A/CX-X

■ Reel Dimensions

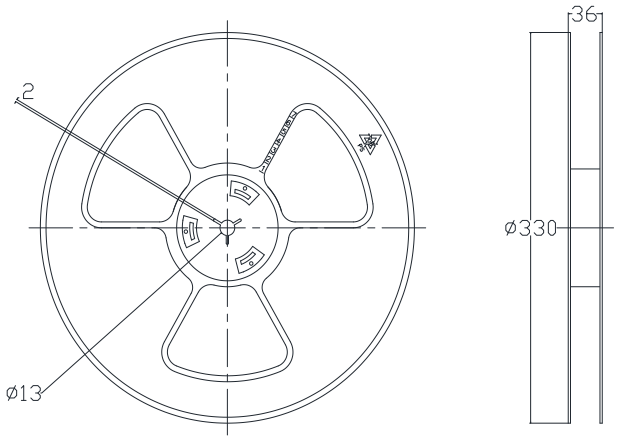

■ Packing & Labe Specifications

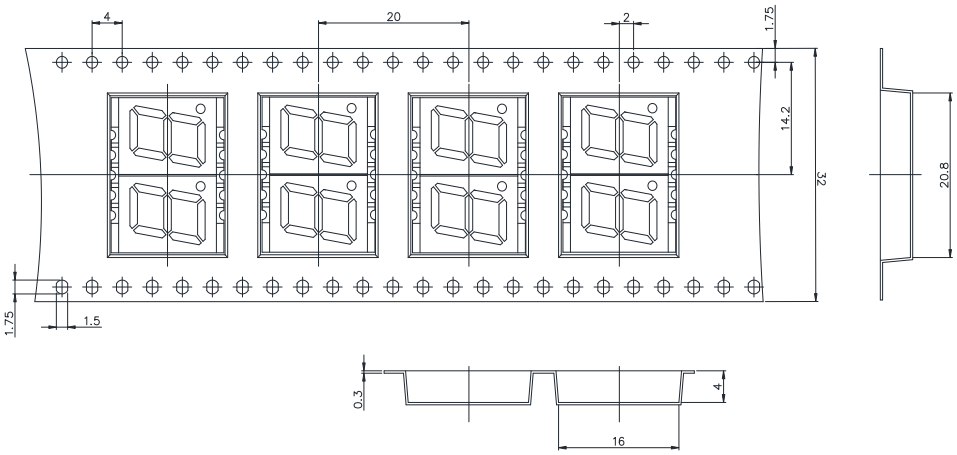

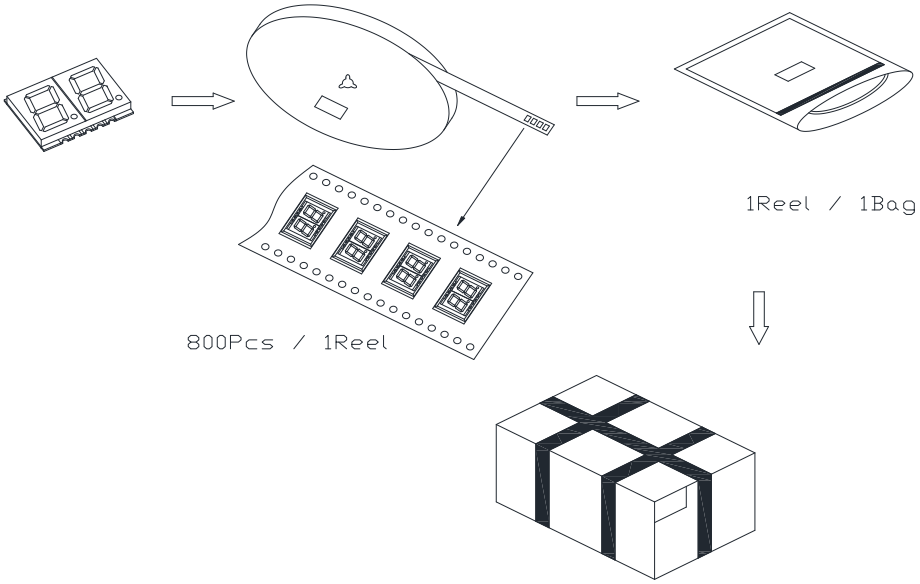

Note: The specifications are subject to change without notice. Please contact us for updated information.