SL-T4232IRC050-L380

DATA SHEET

SPEC. NO. : SZ19061802
DATE : 2023/08/05
REV. : A/1

Approved By: Checked By: Prepared By:

Features

- Pb free product—RoHS compliant
- Low power consumption, High efficiency
- Reliable and rugged
- Long life – solid state reliability
- Radiant angle: 20°

Package Dimension

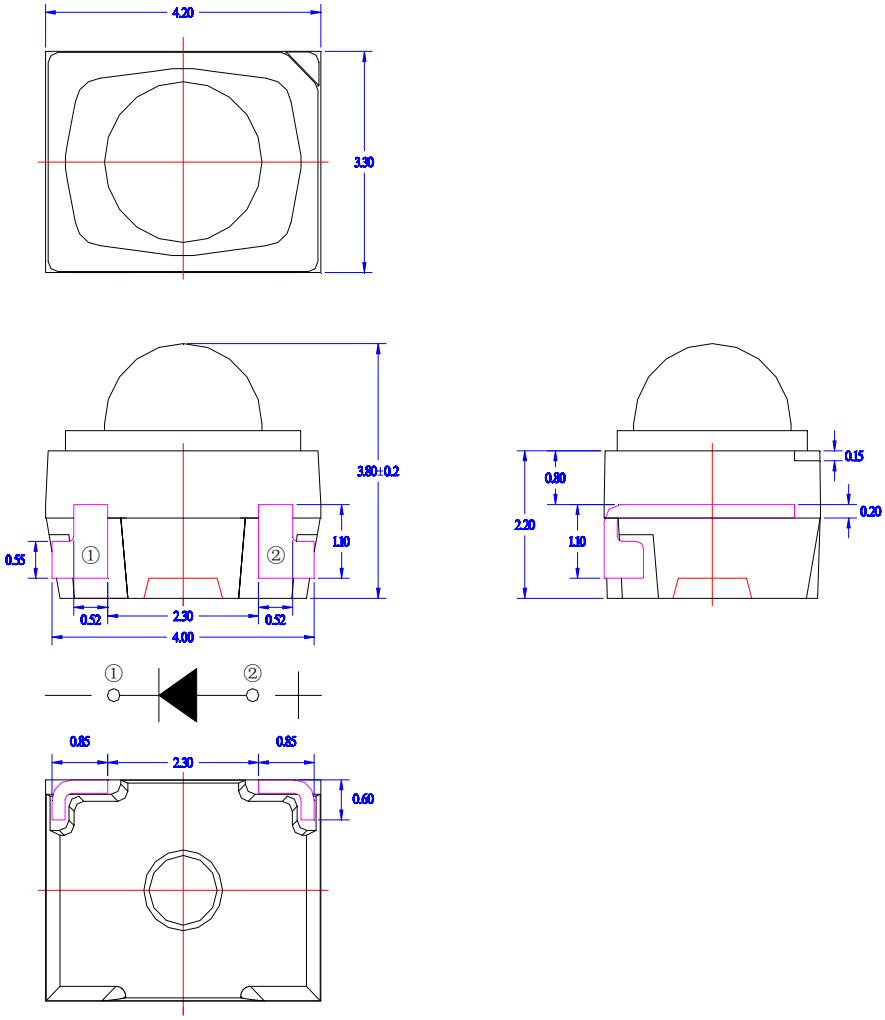

Part NO.	Chip Material	Lens Color
SL-T4232IRC050-L380	AlGaAs/Si	Water Clear

Notes:

1. All dimensions are in millimeters.
2. Tolerance is ±0.10mm unless otherwise noted
3. Specifications are subject to change without notice.

Absolute Maximum Ratings at Ta=25℃

Parameter	MAX.	Unit
Power Dissipation	150	mW
Continuous Forward Current	100	mA
Peak Forward Current*2	1.0	A
Reverse Voltage	5	V
Electrostatic Discharge (HBM)*3	2000	V
Moisture Sensitivity Level*1	5a	
Operating Temperature	-40℃ to + 85℃	
Storage Temperature	-40℃ to + 100℃	
IR Reflow Temperature	260℃ for 10 Seconds MAX.	

1. **Storage and operation:**

(1). Storage requirements before vacuum bag opened: Temperature<30℃, Humidity<65%RH;

(2). Check air leakage and vacuum bag damage before opened. If there is any issue found, check the humidity indicator card immediately after bag opened:

a. If color changes on "10% circle" of the humidity indicator card only and not the circles of 20% and above, components can be used without additional handling;

b. If color changes on both 10% and 20% circles but not the circles of 30% and above, components must be dehumidified according to the conditions of bullet (5);

c. If color changes on 10%, 20%, and 30% circle or above, the product should be returned to the supplier for high temperature dehumidification;

(3). After bag opened, manual soldering or reflow process must follow the following requirements:

a. Complete soldering / reflow within 24 hours;

b. Requirements of working environment: Temperature<30℃, Humidity<60%RH;

(4). If the working condition is outside (3)a or (3)b requirement, the components must be dehumidified according to the conditions of bullet (5);

(5). Low temperature dehumidification: temperature 60±5℃, 24 hours;

(6). Shelf life: 60 days. If it's over 60 days from the production date on the package label, the components must be dehumidified according to the condition of bullet (5). If customer is unable to dehumidify, return components to LIGHT for dehumidification.

2. **Peak Forward Current:**

Condition for is IFP pulse: Pulse Width≤100μs and duty≤1%.

3. **Caution in ESD:**

Static Electricity and surge damages the LED. It is recommend to use a wrist band or anti-electrostatic glove when handling the LED. All devices, equipment and machinery must be properly grounded.

Electrical Optical Characteristics at Ta=25℃

Parameter	Symbol	Min.	Typ.	Max.	Unit	Test Condition
Radiant Intensity	Ie	77	110	---	mW/sr	I_F=50mA (Note 1,3)
Viewing Angle(X)	$2\theta_{1/2}$	---	20	---	Deg.	(Note 2)
Viewing Angle(Y)		---	20	---		
Peak Wavelength	λp	---	940	---	nm	I_F=50mA
Spectral Line Half- Width	△λ	---	50	---	nm	I_F=50mA
Forward Voltage	V_F	---	1.35	1.60	V	I_F=50mA
Reverse Current	I_R	---	---	10	μA	V_R=5V

Note:

1. Point sources of the amount of radiation per unit time in a given direction within the unit solid Angle radiated energy.
2. $\theta_{1/2}$ is the off-axis angle at which the Radiant Intensity is half the axial Radiant Intensity.
3. The Ie guarantee should be added ±15% tolerance.

Typical Electrical / Optical Characteristics Curves
(25℃ Ambient Temperature Unless Otherwise Noted)

Fig.1 Spectral Dlstrbution

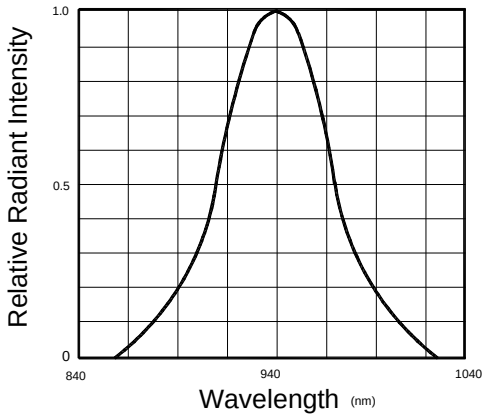

Fig.2 Forward Current Vs Ambient Temperature

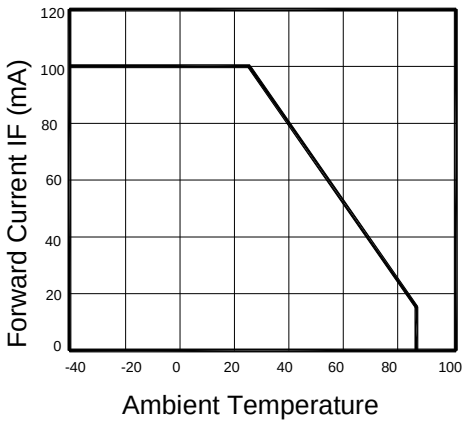

Fig.3 Forward Current Vs Forward Voltage

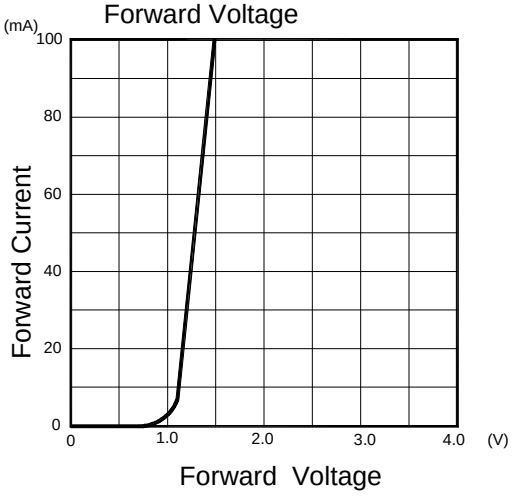

Fig.4 Relative Radiant Intensity Vs Ambient Temperature

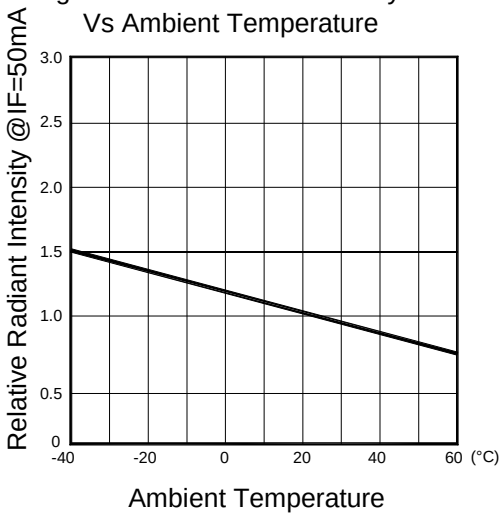

Fig.5 Relative Radiant Intensity Vs Forward Current

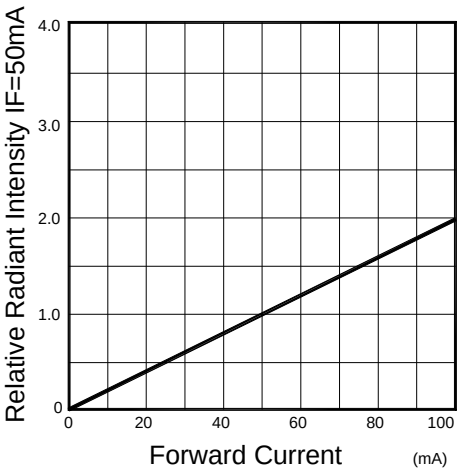

Fig.6 Radiation Diagram

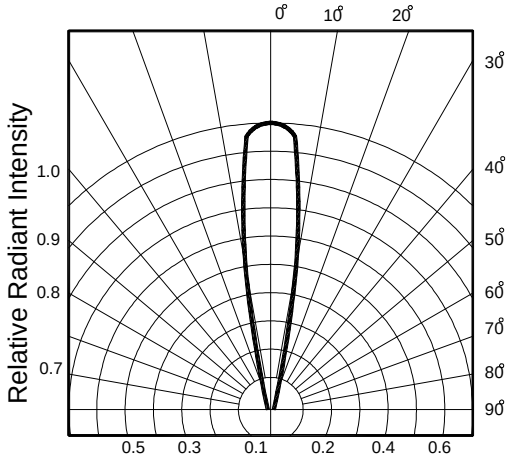

Radiant Intensity Bin Code (IF=50mA)

BIN CODE	Min.(mW/sr)	Max. (mW/sr)
38	77	92
39	92	110
40	110	130
41	130	155
42	155	185
43	185	220

NOTE: The Ie guarantee should be added ±15% tolerance.

Label Explanation

LIGHT Universal Label

Customer Defined Label

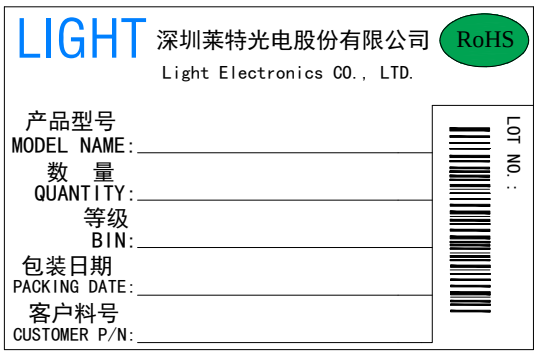

MODEL NAME/产品型号	QUANTITY/包装数量
BIN./分光等级	PACKING DATE/包装日期
CUSTOMER P/N/客户料号	LOT NO./生产批号
REMARKS/备注	/

Reel Dimensions

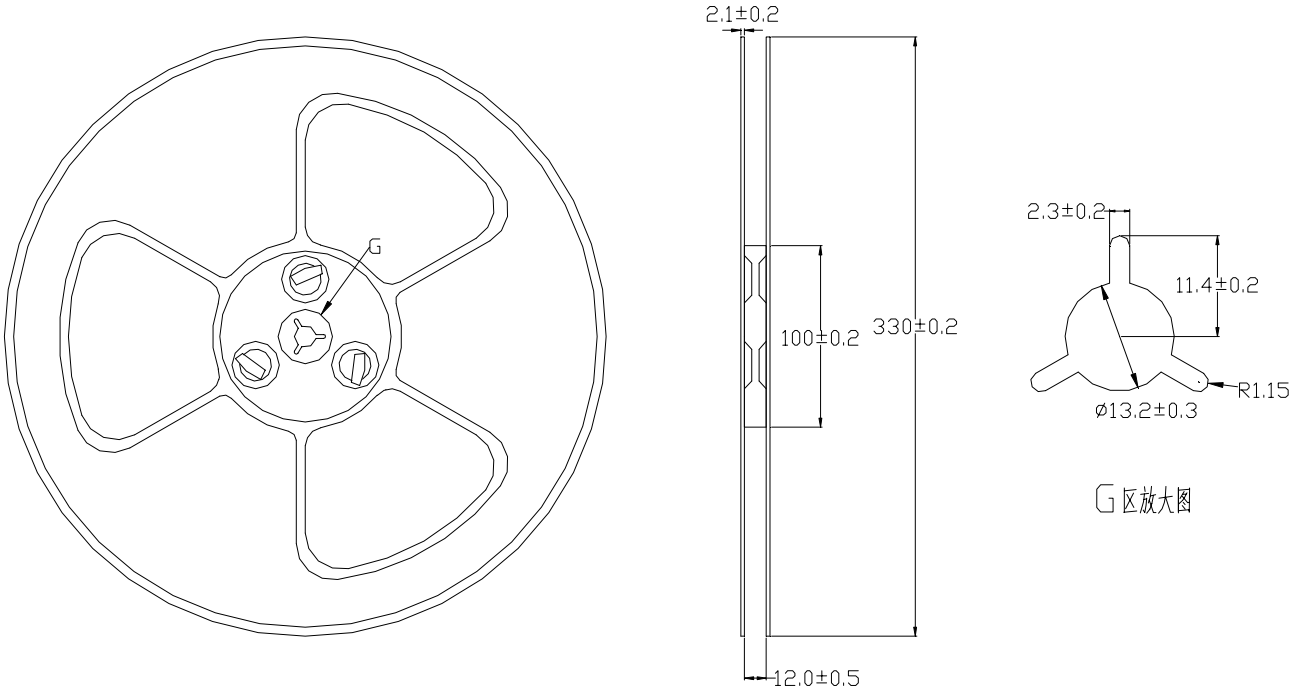

Note: Tolerance unless mentioned is ±0.2mm; Unit = mm

Carrier Tape Specifications (Loaded Quantity: 2300pcs/reel)

ITEM	W	A0	A1	B0	B1	K0	E	F	D0	D1	P0	P1	P2	T
DIM	12.00	3.85	1.85	4.40	3.70	3.65	1.75	5.50	1.50	1.60	4.00	8.00	2.00	0.30
TOLE	+0.10 −0.10	+0.10 −0.10	+0.10 −0.10	+0.10 −0.10	+0.10 −0.10	+0.10 −0.10	+0.10 −0.10	+0.10 −0.10	+0.10 −0.10	+0.10 −0.10	+0.10 −0.10	+0.10 −0.10	+0.10 −0.10	+0.05 −0.05

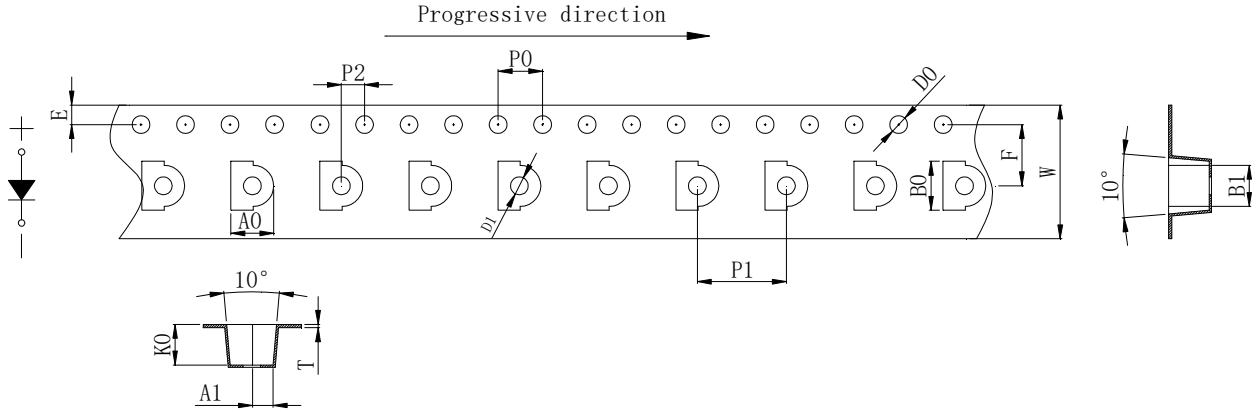

Note: Tolerance unless mentioned is ±0.1mm; Unit = mm

Moisture Resistant Packaging

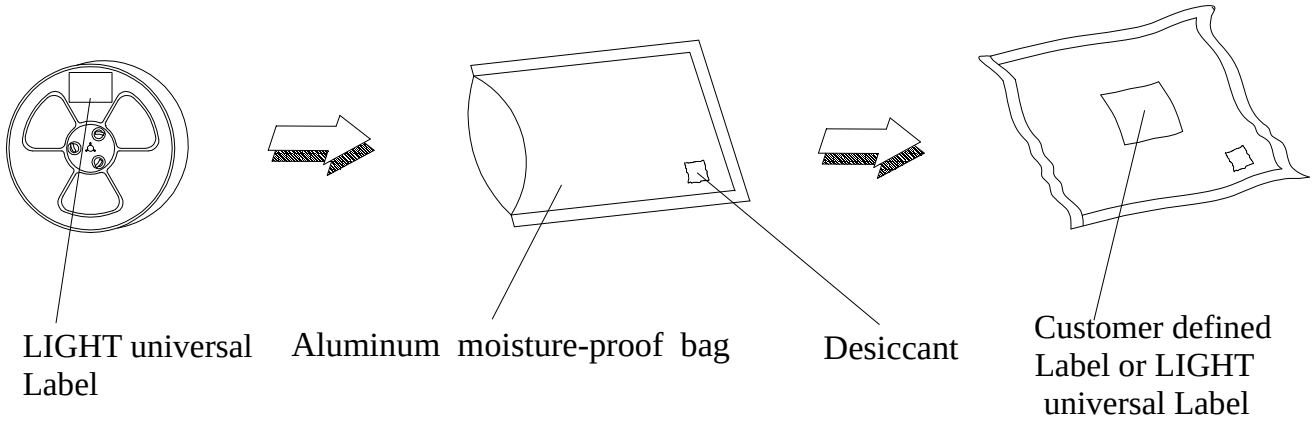

Suggest IR Reflow Condition For Lead Free

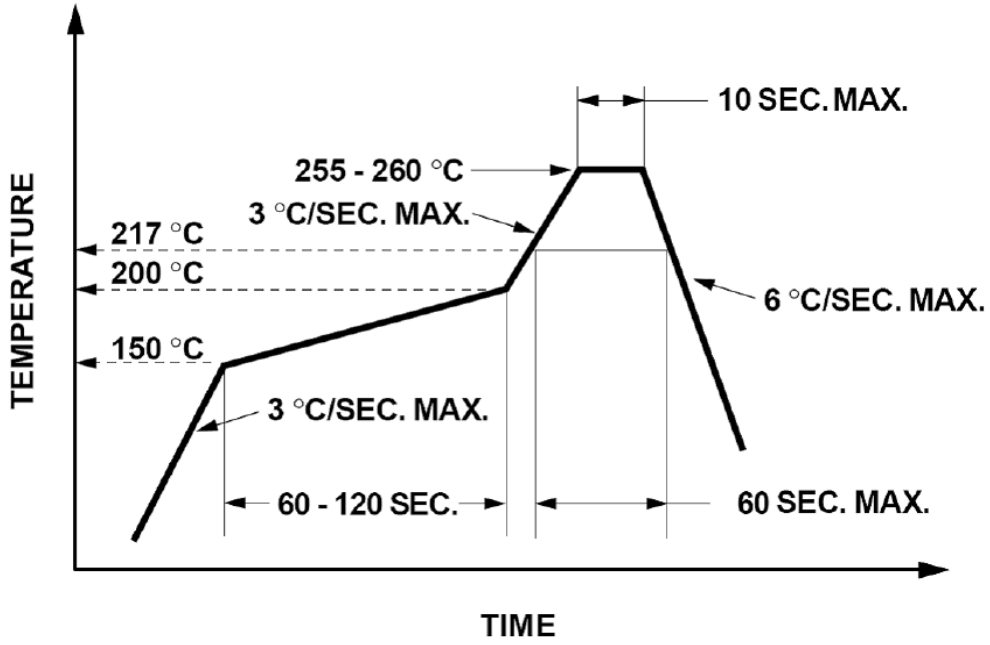

1. Reflow soldering should not be done more than two times.
2. When soldering, do not put stress on the LEDs during heating.

Soldering iron

1. When hand soldering, the temperature of the iron must less than 300℃ for 3 seconds.
2. The hand solder should be done only once.

Repairing
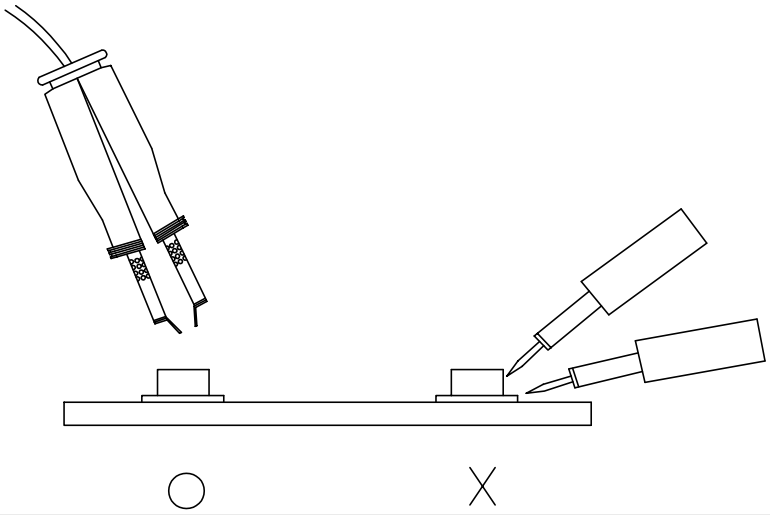
Repair should not be done after the LEDs have been soldered. When repairing is unavoidable, a double-head soldering iron should be used (as below figure). It should be confirmed beforehand whether the characteristics of LEDs will or will not be damaged by repairing.