LT-GDM-16

Ground-Detecting Module

Product Specifications

SPEC. NO. : SZ23121203
DATE : 2023/12/12
REV. : A/0

Approved By: Checked By: Prepared By:

Dimensions of Module

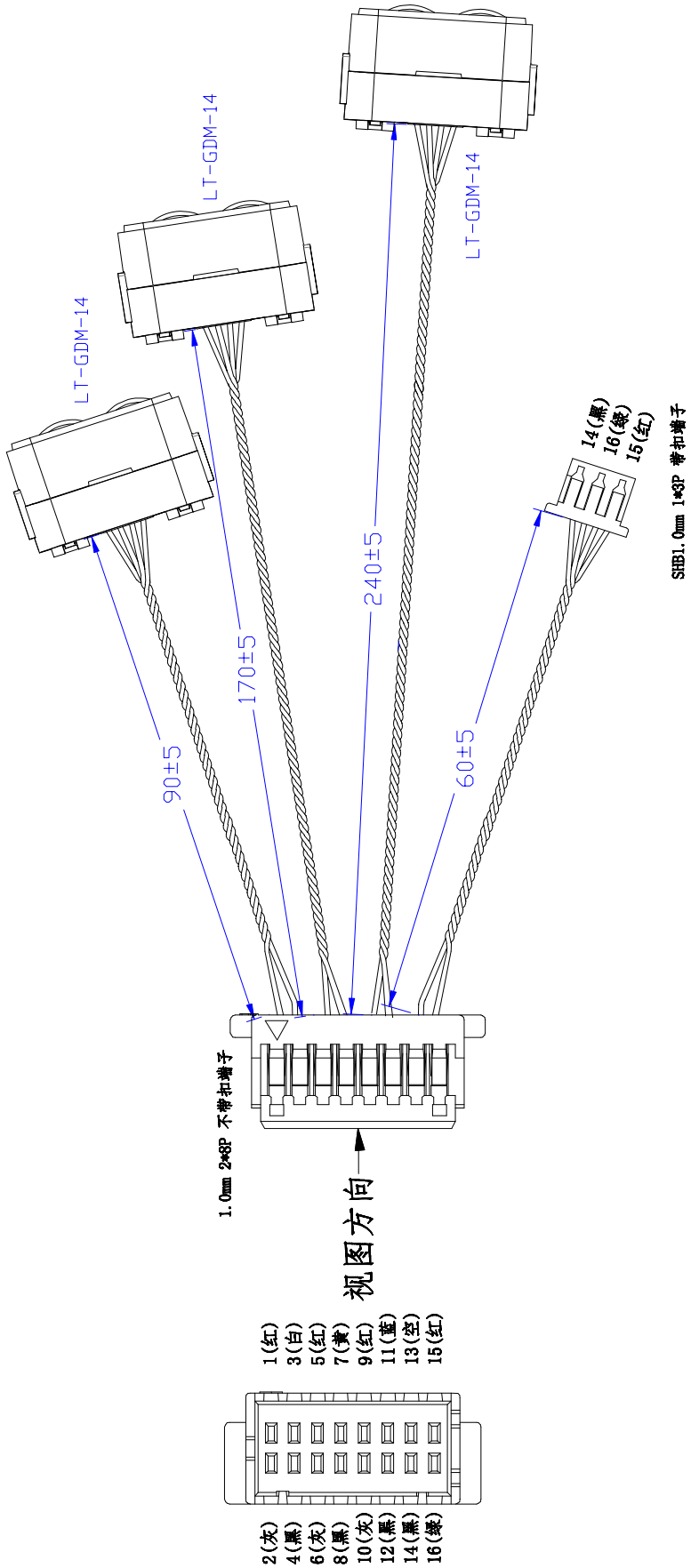

Part No.	LT-GDM-16	Page	2 of 6

Dimensions of the Single Module

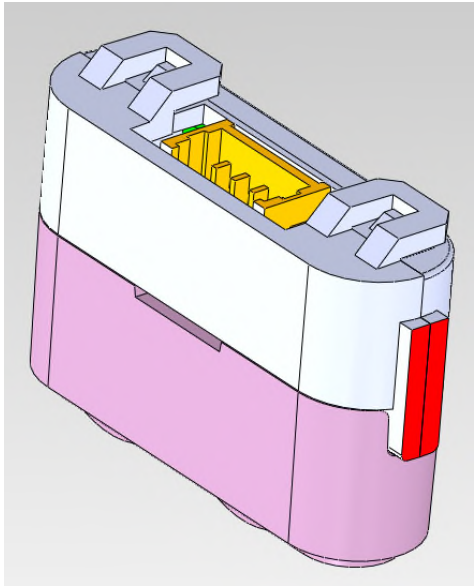

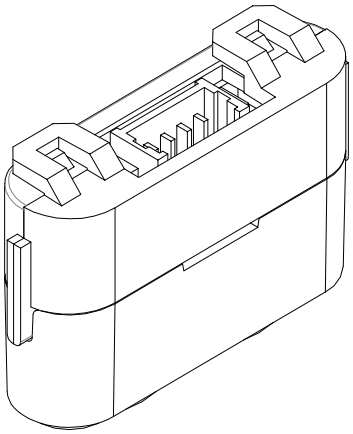

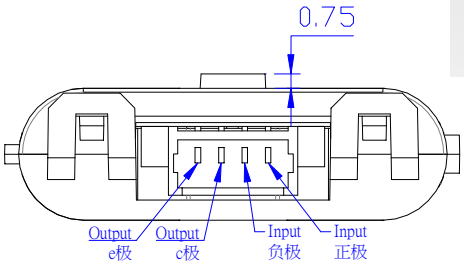

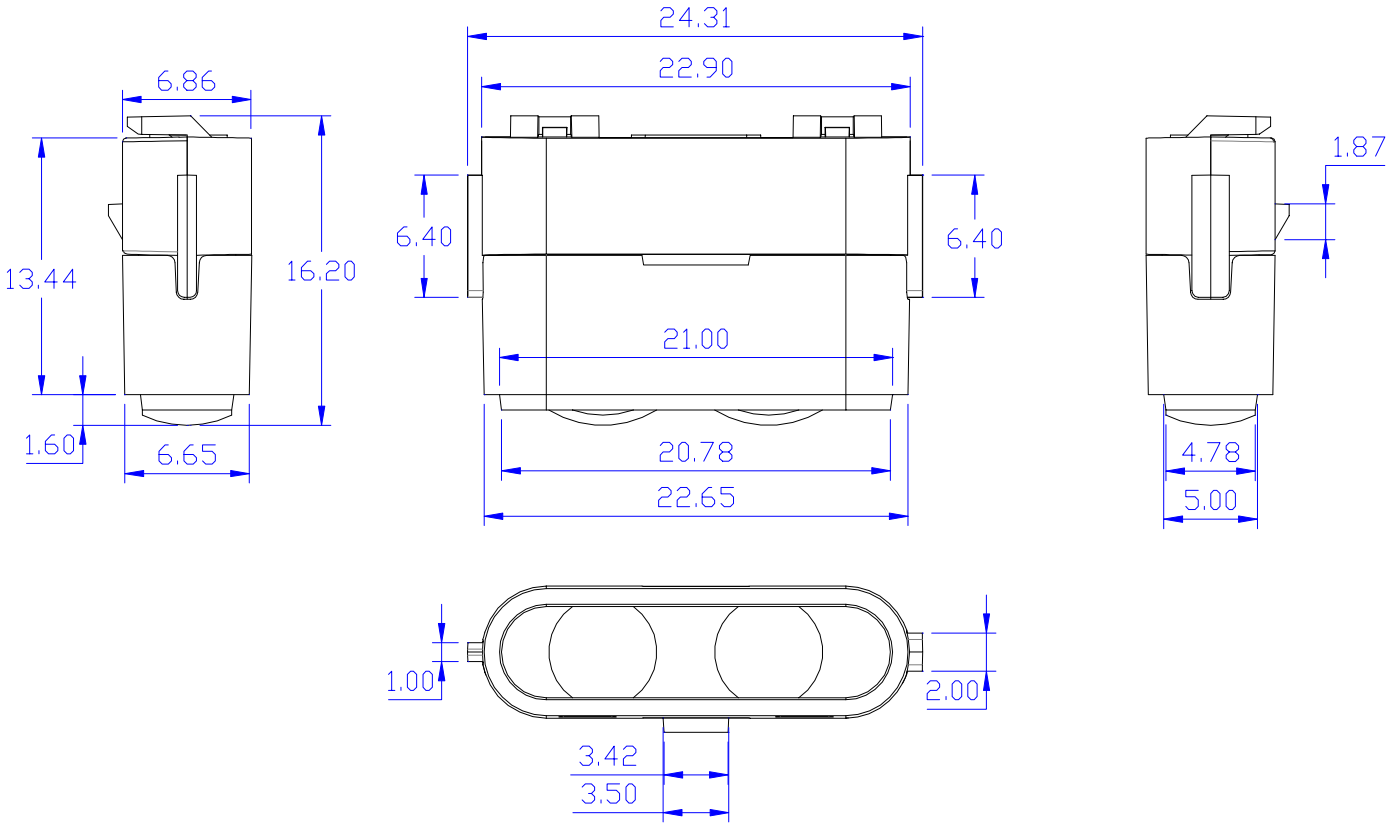

Notes:

1. All dimensions are in millimeters.
2. Tolerance is ±0.50mm unless otherwise noted.
3. The size marked on the drawing is Ground-Detecting Module.
4. Specifications are subject to change without notice.

Features

- Pb free product—RoHS compliant
- Fast response time
- High sensitivity
- Invisible wavelength λp=940nm
- Integration structure

Typical Applications

- Intelligent Sweeping Robot

Absolute Maximum Ratings at Ta=25℃

Parameter		Symbol	Ratings	Unit
Input	Power Dissipation	Pd	170	mW
	Reverse Voltage	V_R	5	V
	Forward Current	I_F	100	mA
	Peak Forward Current*1	I_{FP}	250	mA
Output	Collector Power Dissipation	Pc	75	mW
	Collector Current	I_C	20	mA
	Collector-Emitter Voltage	V_{CEO}	30	V
	Emitter-Collector Voltage	V_{ECO}	5	V
Electrostatic Discharge (HBM)		ESD	4000	V
Operating Temperature Range		T_{opr}	-25℃ to + 65℃	℃
Storage Temperature Range		T_{stg}	-40℃ to + 85℃	℃

Note: 1. Pulse width≤0.1msec, duty cycle≤1/10.

Electrical Optical Characteristics at Ta=25℃

Input						
Parameter	Symbol	Min.	Typ.	Max.	Unit	Test Condition
Peak Wavelength	λp	---	940	---	nm	I_F=50mA
Forward Voltage	V_F	---	1.35	1.60	V	I_F=50mA
Reverse Current	I_R	---	---	10	μA	V_R=5V

Output						
Parameter	Symbol	Min.	Typ.	Max.	Unit	Test Condition
Collector-Emitter Breakdown Voltage	BV_{CEO}	30	---	---	V	I_C=0.1mA Ee=0mW/cm2
Emitter-Collector Breakdown Voltage	BV_{ECO}	5	---	---	V	I_E=0.1mA Ee=0mW/cm2
Collector-Emitter Saturation Voltage	$V_{CE(SAT)}$	---	---	0.4	V	I_C=2mA Ee=1.0mW/cm2
Rise Time	T_r	---	15	---	μs	V_{CC}=5V R_L=1KΩ I_C=1mA
Fall Time	T_f	---	15	---	μs	
Collector Dark Current	I_{CEO}	---	---	100	nA	V_{CE}=10V Ee=0mW/cm2
On State Collector Current	$I_{C(ON)}$	1.0	5.0	---	mA	V_{CE}=5V I_F=20mA

ADC value standard (Standard machine provided by customer)

1、The distance from the Ground-Detecting Module to the black carpet is 31.0mm;

2、The distance from the Ground-Detecting Module to the white interface is 101.0mm;

3、The black ADC value ranges: 40-200;

4、The white ADC value ranges: 5-25.

PACKAGE

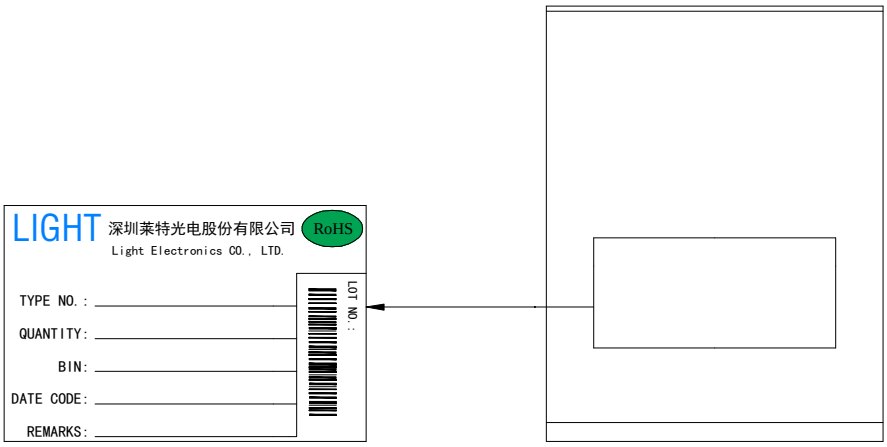

Bag

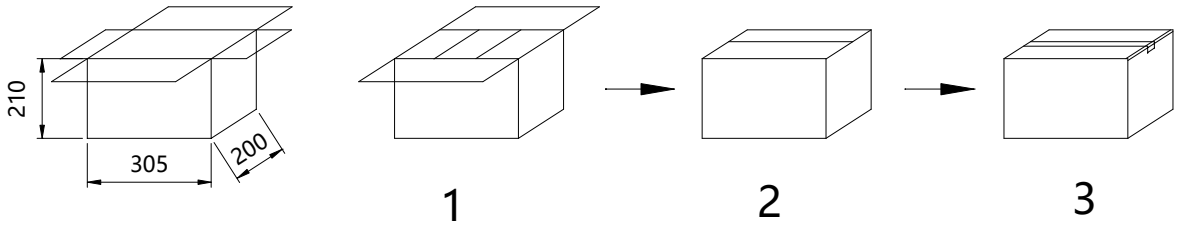

Bag volume (pcs / Bag)	Outer Carton volume (Bags / Carton)
TBD	TBD