Description

The AO4443 uses advanced trench technology to provide excellent $R_{DS(ON)}$, low gate charge and operation with gate voltages as low as 2.5V. This device is suitable for use as a Battery protection or in other Switching application.

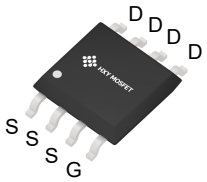

SOP-8
(SOIC-8)

General Features

V_{DS} =-40V I_D = -13A

$R_{DS(ON)}$ < 19mΩ @ V_{GS}=10V

Application

Battery protection

Load switch

Uninterruptible power supply

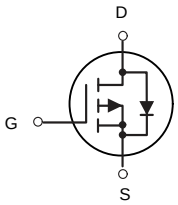

P-Channel MOSFET

Ordering Information

Product ID	Pack	Brand	Qty(PCS)
AO4443	SOP-8(SOIC-8)	HXY MOSFET	3000

Absolute Maximum Ratings (Tc=25℃ unless otherwise noted)

Symbol	Parameter	Rating	Units
V_{DS}	Drain-Source Voltage	- 40	V
VGS	Gate-Source Voltage	±20	V
I_D@T_A=25℃	Drain Current[3], V_{GS} @ 10V	-13	A
IDM	Pulsed Drain Current[1]	-52	A
P_D@T_A=25℃	Total Power Dissipation	3	W
TSTG	Storage Temperature Range	-55 to 150	℃
T_J	Operating Junction Temperature Range	-55 to 150	℃
Rthj-a	Maximum Thermal Resistance, Junction-ambient[3]	41	℃/W

Electrical Characteristics (T_J = 25°C, unless otherwise noted)

Parameter		Symbol	Test Conditions	Min.	Typ.	Max.	Unit
Static Characteristics							
Drain-Source Breakdown Voltage		$V_{(BR)DSS}$	V_{GS} = 0V, I_D = -250μA	-40	-	-	V
Gate-body Leakage current		I_{GSS}	V_{DS} = 0V, V_{GS} = ±20V	-	-	±100	nA
Zero Gate Voltage Drain Current	T_J=25℃	I_{DSS}	V_{DS} = -40V, V_{GS} = 0V	-	-	-1	μA
	T_J=100℃			-	-	-100	
Gate-Threshold Voltage		$V_{GS(th)}$	V_{DS} = V_{GS}, I_D = -250μA	-1.0	-1.5	-2.2	V
Drain-Source On-Resistance[4]		$R_{DS(on)}$	V_{GS} = -10V, I_D = -10A	-	14.0	19	mΩ
			V_{GS} = -4.5V, I_D = -5 A	-	19.5	25	
Forward Transconductance[4]		g_{fs}	V_{DS} = -10V, I_D = -10A	-	44	-	S
Dynamic Characteristics[5]							
Input Capacitance		C_{iss}	V_{DS} = -20V, V_{GS} =0V, f =1MHz	-	2525	-	pF
Output Capacitance		C_{oss}		-	190	-	
Reverse Transfer Capacitance		C_{rss}		-	172	-	
Gate Resistance		R_g	f =1MHz	-	10	-	Ω
Switching Characteristics[5]							
Total Gate Charge		Q_g	V_{GS} = -10V,V_{DS} = -20V, I_D= -10A	-	35	-	nC
Gate-Source Charge		Q_{gs}		-	5.5	-	
Gate-Drain Charge		Q_{gd}		-	8	-	
Turn-On Delay Time		$t_{d(on)}$	V_{GS} = -10V, V_{DD} = -20V, R_G = 3Ω, I_D= -10A	-	14.5	-	ns
Rise Time		t_r		-	20.2	-	
Turn-Off Delay Time		$t_{d(off)}$		-	32	-	
Fall Time		t_f		-	10	-	
Drain-Source Body Diode Characteristics							
Diode Forward Voltage[4]		V_{SD}	I_S = -10A, V_{GS} = 0V	-	-	-1.2	V
Continuous Source Current	T_C=25°C	I_S	-	-	-	-13	A

Note :

1. Repetitive rating, pulse width limited by junction temperature $T_{J(MAX)}$=150°C.
2. The EAS data shows Max. rating . The test condition is V_{DD}= -25V, V_{GS}= -10V, L= 0.1mH, I_{AS}= -34A.
3. The data tested by surface mounted on a 1 inch2 FR-4 board with 2OZ copper, The value in any given application depends on the user's specific board design.
4. The data tested by pulsed , pulse width ≤ 300us , duty cycle ≤ 2%.
5. This value is guaranteed by design hence it is not included in the production test.

Typical Characteristics

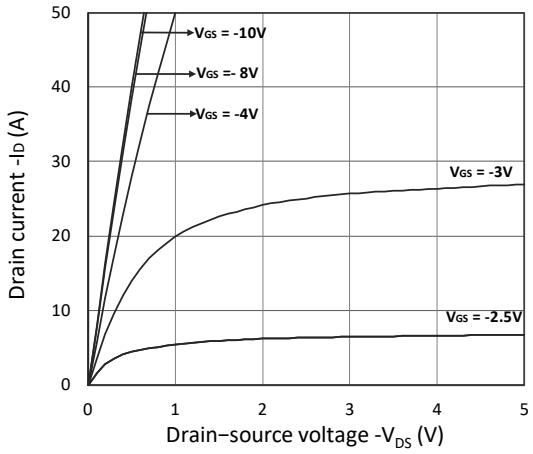

Figure 1. Output Characteristics

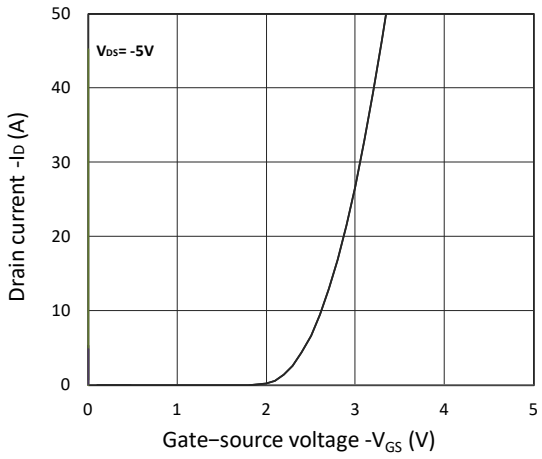

Figure 2. Transfer Characteristics

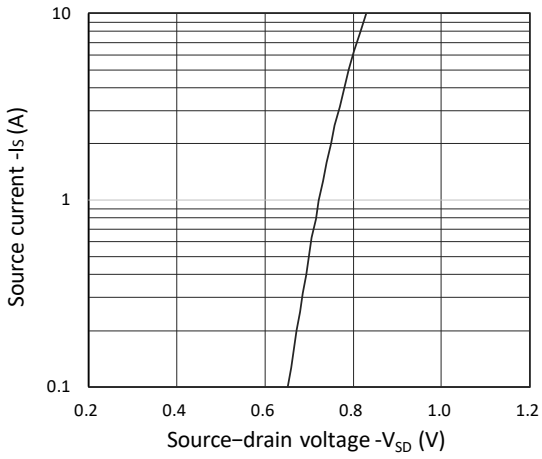

Figure 3. Forward Characteristics of Reverse

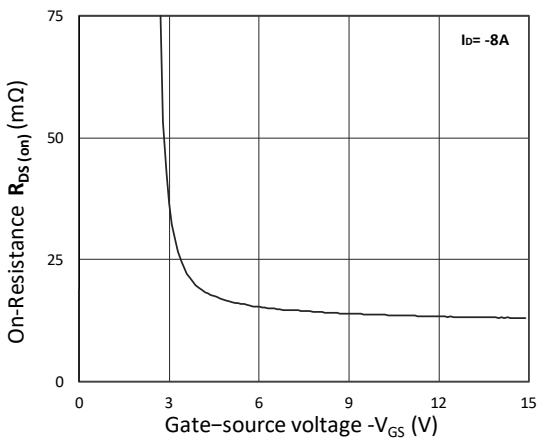

Figure 4. $R_{DS(ON)}$ vs. V_{GS}

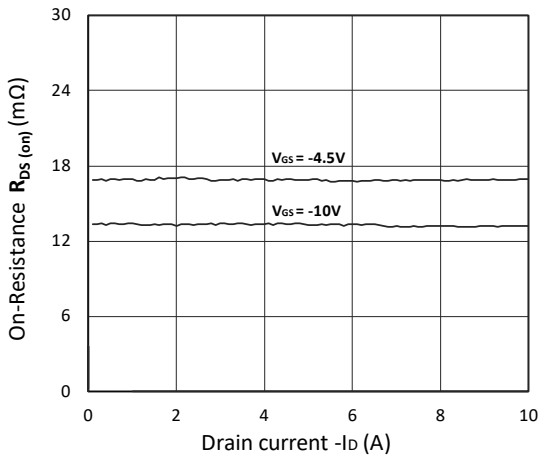

Figure 5. $R_{DS(ON)}$ vs. I_D

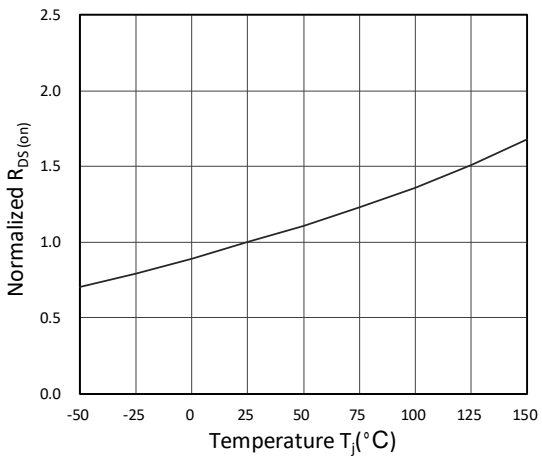

Figure 6. Normalized $R_{DS(on)}$ vs. Temperature

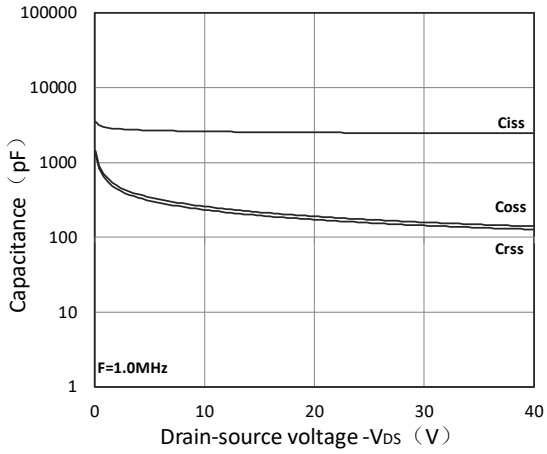

Figure 7. Capacitance Characteristics

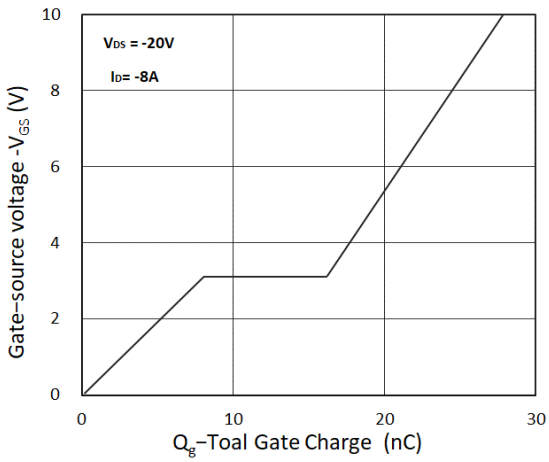

Figure 8. Gate Charge Characteristics

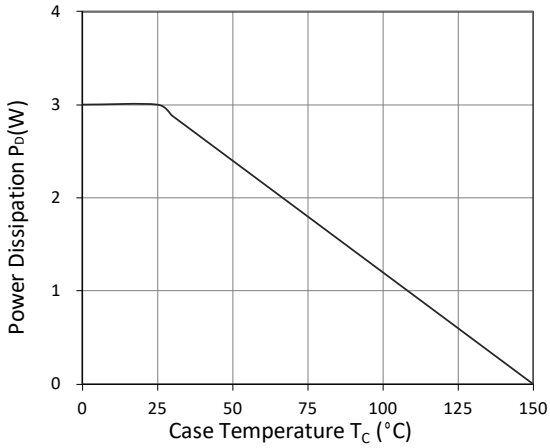

Figure 9. Power Dissipation

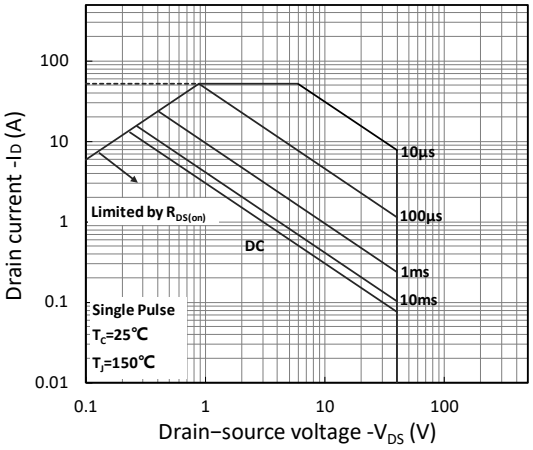

Figure10. Safe Operating Area

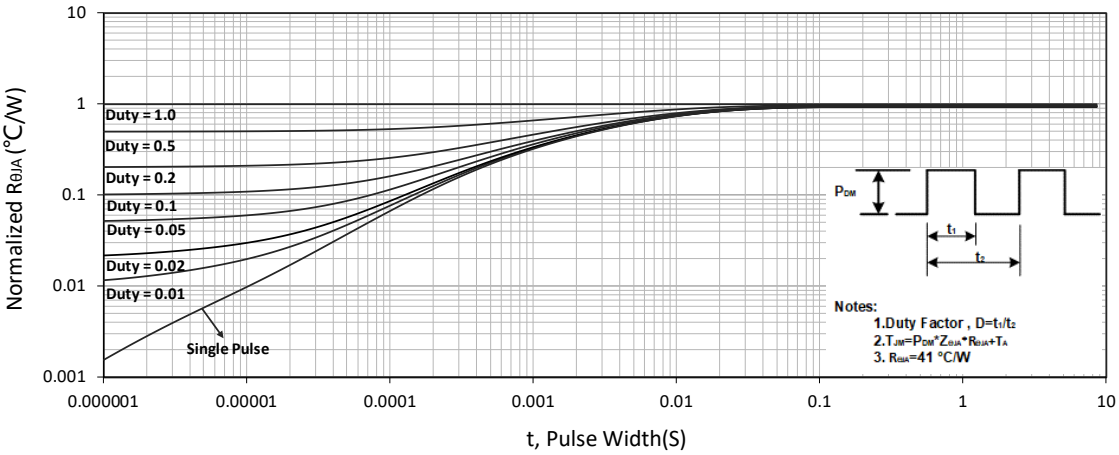

Figure 11. Normalized Maximum Transient Thermal Impedance

Test Circuit

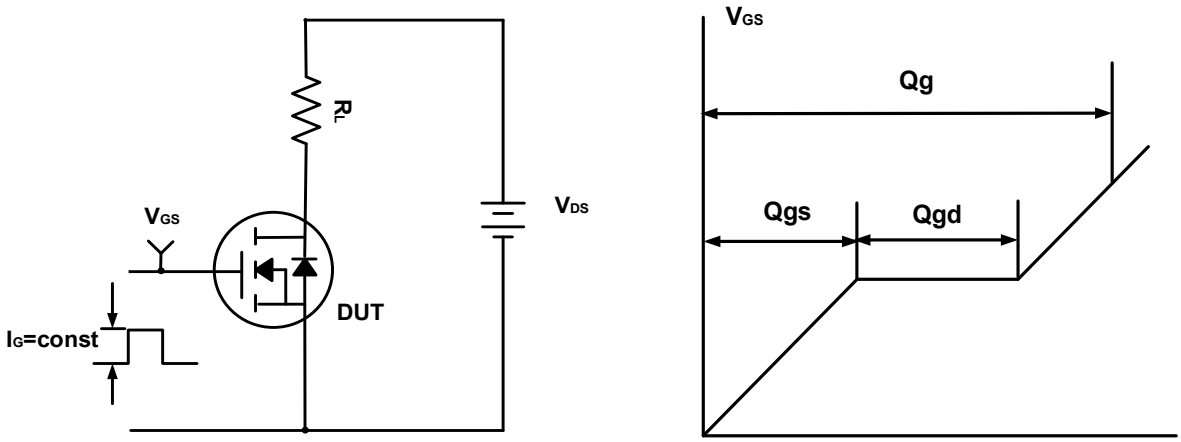

Figure A. Gate Charge Test Circuit & Waveforms

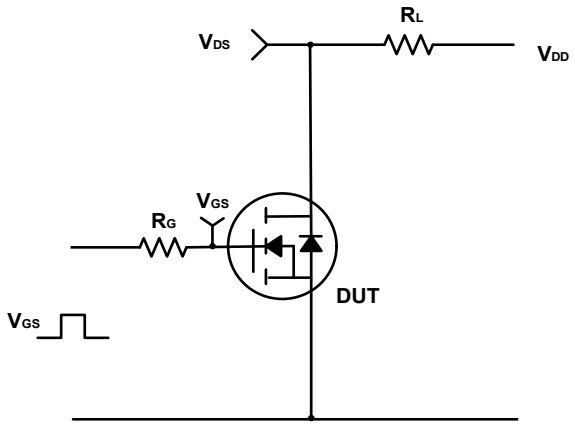

Figure B. Switching Test Circuit & Waveforms

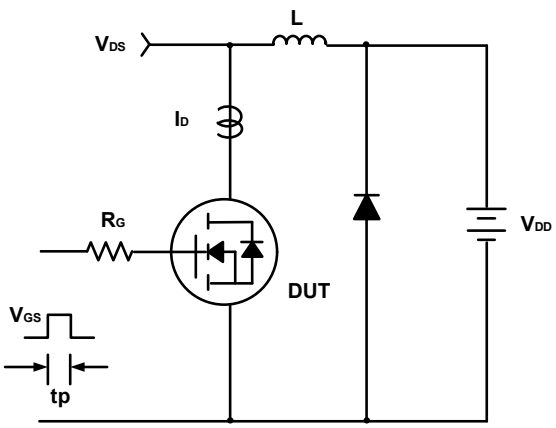

Figure C. Unclamped Inductive Switching Circuit & Waveforms

SOP-8(SOIC-8) Package Outline Dimensions

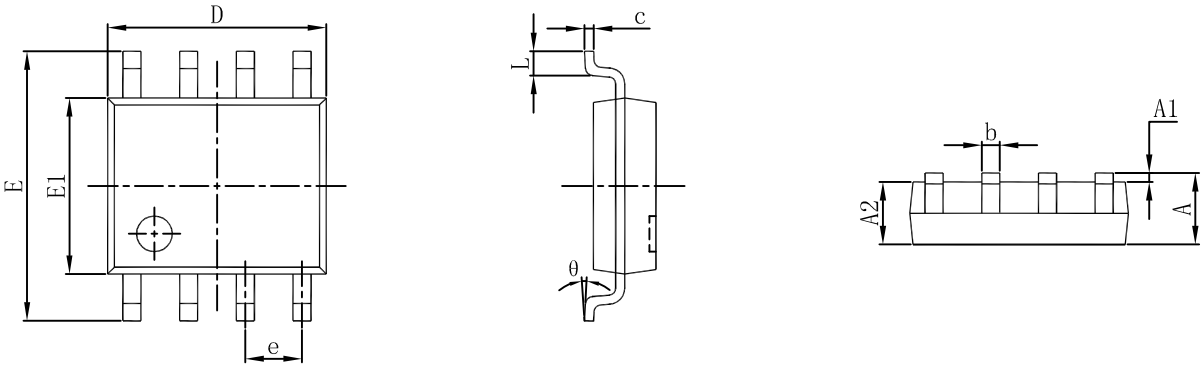

Symbol	Dimensions In Millimeters		Dimensions In Inches	
	Min	**Max**	**Min**	**Max**
A	1.350	1.750	0.053	0.069
A1	0.100	0.250	0.004	0.010
A2	1.350	1.550	0.053	0.061
b	0.330	0.510	0.013	0.020
c	0.170	0.250	0.007	0.010
D	4.800	5.000	0.189	0.197
e	1.270 (BSC)		0.050 (BSC)	
E	5.800	6.200	0.228	0.244
E1	3.800	4.000	0.150	0.157
L	0.400	1.270	0.016	0.050
θ	0°	8°	0°	8°

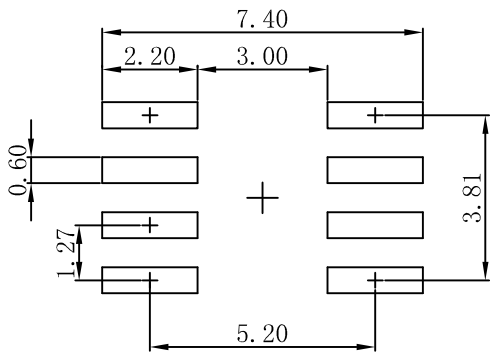

Note:
1.Controlling dimension:in millimeters.
2.General tolerance:± 0.05mm.
3.The pad layout is for reference purposes only.

Attention

■ Any and all HUA XUAN YANG ELECTRONICS products described or contained herein do not have specifications that can handle applications that require extremely high levels of reliability, such as life-support systems, aircraft's control systems, or other applications whose failure can be reasonably expected to result in serious physical and/or material damage. Consult with your HUA XUAN YANG ELECTRONICS representative nearest you before using any HUA XUAN YANG ELECTRONICS products described or contained herein in such applications.

■ HUA XUAN YANG ELECTRONICS assumes no responsibility for equipment failures that result from using products at values that exceed, even momentarily, rated values (such as maximum ratings, operating condition ranges, or other parameters) listed in products specifications of any and all HUA XUAN YANG ELECTRONICS products described or contained herein.

■ Specifications of any and all HUA XUAN YANG ELECTRONICS products described or contained herein stipulate the performance, characteristics, and functions of the described products in the independent state, and are not guarantees of the performance, characteristics, and functions of the described products as mounted in the customer's products or equipment. To verify symptoms and states that cannot be evaluated in an independent device, the customer should always evaluate and test devices mounted in the customer's products or equipment.

■ HUA XUAN YANG ELECTRONICS CO.,LTD. strives to supply high-quality high-reliability products. However, any and all semiconductor products fail with some probability. It is possible that these probabilistic failures could
give rise to accidents or events that could endanger human lives, that could give rise to smoke or fire, or that could cause damage to other property. When designing equipment, adopt safety measures so that these kinds of accidents or events cannot occur. Such measures include but are not limited to protective circuits and error prevention circuits for safe design, redundant design, and structural design.

■ In the event that any or all HUA XUAN YANG ELECTRONICS products(including technical data, services) described or contained herein are controlled under any of applicable local export control laws and regulations, such products must not be exported without obtaining the export license from the authorities concerned in accordance with the above law.

■ No part of this publication may be reproduced or transmitted in any form or by any means, electronic or mechanical, including photocopying and recording, or any information storage or retrieval system, or otherwise, without the prior written permission of HUA XUAN YANG ELECTRONICS CO.,LTD.

■ Information (including circuit diagrams and circuit parameters) herein is for example only ; it is not guaranteed for volume production. HUA XUAN YANG ELECTRONICS believes information herein is accurate and reliable, but no guarantees are made or implied regarding its use or any infringements of intellectual property rights or other rights of third parties.

■ Any and all information described or contained herein are subject to change without notice due to product/technology improvement, etc. When designing equipment, refer to the "Delivery Specification" for the HUA XUAN YANG ELECTRONICS product that you intend to use.