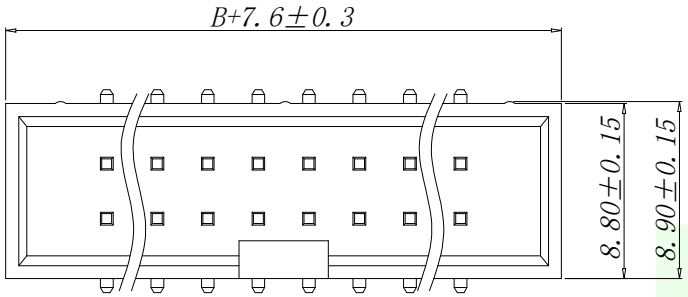

SPECIFICATIONS

Current Rating: 3Amps
Insulation Resistance: 1000MΩ Min
Contact Resistance: 20mΩ Max
Withstanding Voltage: AC 1000V
Operation Temperature:-40° to+105°
Contact Material: Brass
Insrlator Material: Polyester(UL 94V-0)
Contact plating: Gold Flash
Standard: PA6T
Max.Processing Temp: 240° C for30-60seconds
(260° Cfor10seconds)

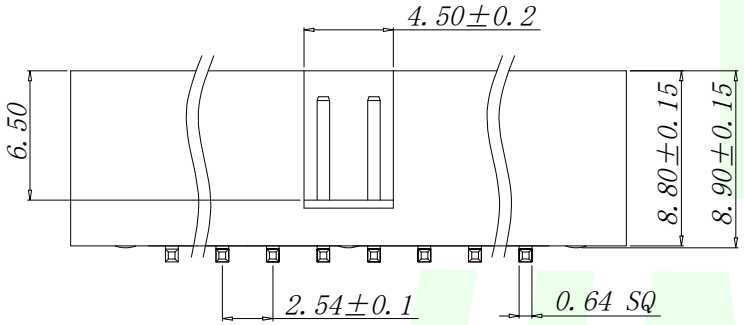

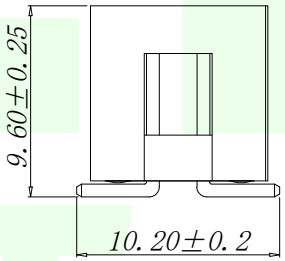

P/N	PIN	DIM.A	DIM.B
HMT-IDC2.54-2-3PL	2*3	5.08	7.62
HMT-IDC2.54-2-4PL	2*4	7.62	10.16
HMT-IDC2.54-2-5PL	2*5	10.16	12.70
HMT-IDC2.54-2-6PL	2*6	12.70	15.24
HMT-IDC2.54-2-7PL	2*7	15.24	17.78
HMT-IDC2.54-2-8PL	2*8	17.78	20.32
HMT-IDC2.54-2-9PL	2*9	20.32	22.86
HMT-IDC2.54-2-10PL	2*10	22.86	25.40
HMT-IDC2.54-2-12PL	2*12	27.94	30.48
HMT-IDC2.54-2-13PL	2*13	30.48	33.02
HMT-IDC2.54-2-14PL	2*14	33.02	35.56
HMT-IDC2.54-2-15PL	2*15	35.56	38.10
HMT-IDC2.54-2-16PL	2*16	38.10	40.64
HMT-IDC2.54-2-17PL	2*17	40.64	43.18
HMT-IDC2.54-2-18PL	2*18	43.18	45.72
HMT-IDC2.54-2-20PL	2*20	48.26	50.80
HMT-IDC2.54-2-22PL	2*22	53.34	55.88
HMT-IDC2.54-2-25PL	2*25	60.96	63.50
HMT-IDC2.54-2-30PL	2*30	73.66	76.20
HMT-IDC2.54-2-32PL	2*32	78.74	81.28

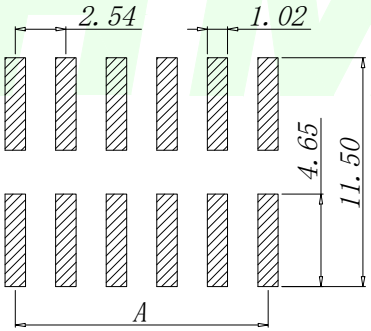

RECOMMEND P.C.B LAYOUT

PCB TOLERANCE:±0.05 (TOP VIEW)

GENERAL TOLERANCES UNLESS SPECIFIED		HMT CONN 深圳市华明通电子有限公司 Shenzhen Huamingtong Electronics Co., Ltd			
X.±0.30	X.°±5°	PART NO. HMT-IDC2.54-2-NPL	TITLE: 2.54DC3-NPin H8.9 SMT PC10.2 PB9.6 L11.5 6T		
.X±0.20	.X°±1°				
.XX±0.10	.XX°±0.5°	DESIGN: James	CUSTOMER	SIZE	UNITS
				A4	MM
MANUFACTURE DWG		CHED: Talen		SCALE	SHEET
		APPD: Sophia		N:A	1/1