ROHS

REV.	ECN NO.	DESCRIPTION	DRAW	DATE

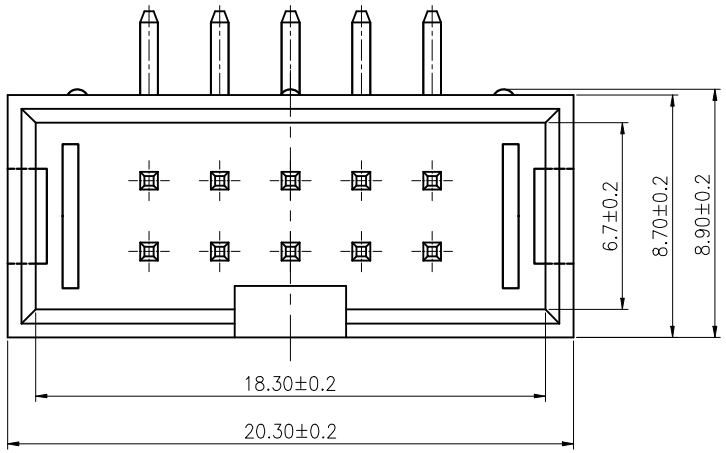

SPECIFICATION:

Current Rating : 3AMP
Temperature Range : −40℃to+105℃
Contact Resistance : 20mΩ Max
Insulation Resistance : 1000MΩ Min
Withstanding Voltage : AC 1000V
Material:
Insulator : Polyester (UL94V−0)
Standard: PA9T
Contact: Brass
Plating : Au over Ni

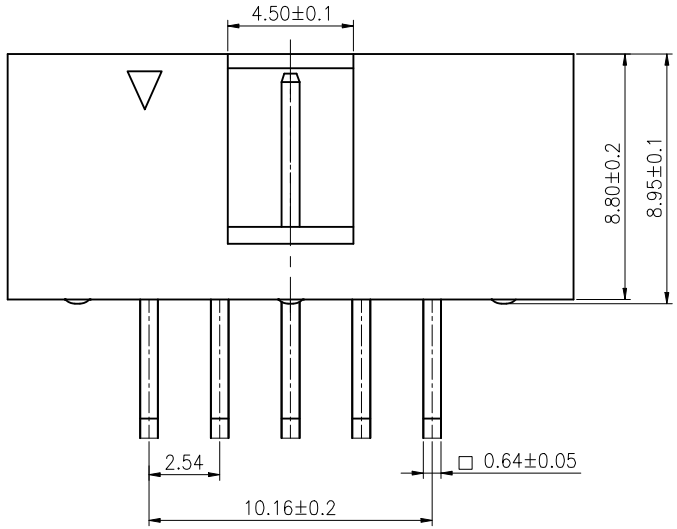

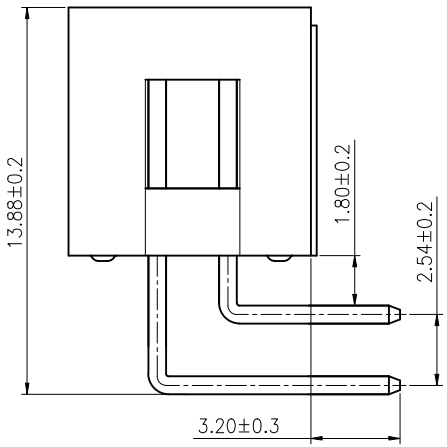

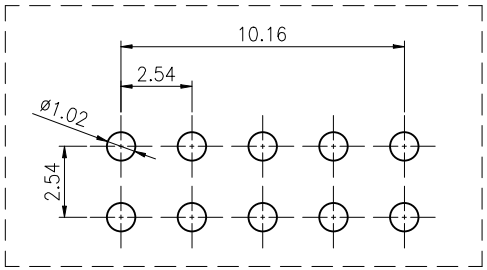

PCB LAYOUT

COSTOMER DRAWING			LAILAN 深圳市莱联电子有限公司 SHENZHEN LAILIAN ELECTRONICS CO.,LTD		
DRAWING			TITLE	简牛 PIN距2.54 塑高8.8 双排5PIN 弯插	REV. A
CHECKED					
APPROVED					
TOLERANCES ARE			PART NO.	LAIL-SI-2.54-2X5P-WC	UNITS mm
30-150	±0.35	ANGLE			
10-30	±0.2		DWG. NO.		Projection
5-10	±0.15	±3°			
0-5	±0.1				