REV.	DESCRIPTION	ECN NO.	NAME	DATE

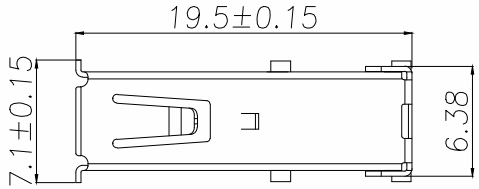

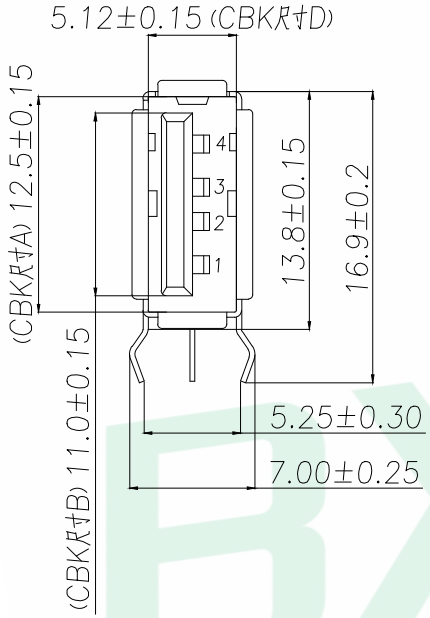

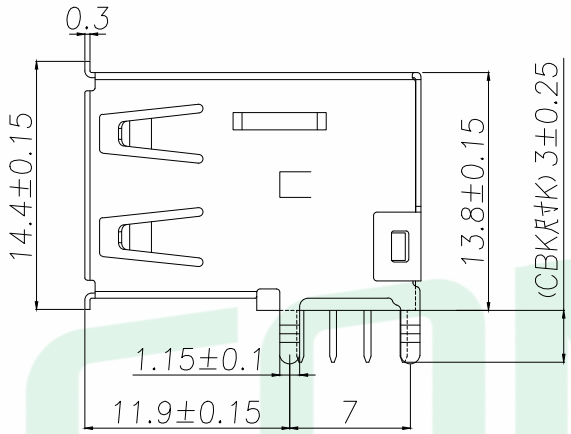

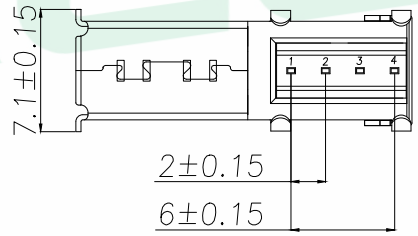

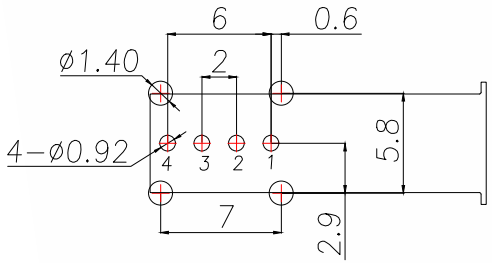

PCB Layout

规格说明:Specifications:

电气特性:Electrical:

1.额定电流:Current Rating
1.5A/contact terminal

2.额定电压:Voltage Rating
30V DC

3.接触阻抗:Contact Resistance
30 milliohms MAX

4.耐电压:Dielectnic Withstanding Voitage:
500 V AC AT Sea Levol

5.绝缘阻抗:Lnsulation Resistance:
1000MEGA ohms MIN

物理性能:Mechanical:

1.插拔力:Cnnector Mate and Unmate Force
Mate force:3.57kgf(MAX)
Unmate force:1.02kgf(MIN)

2.端子保持力:Terminal Retenion
1.2kgf(MIN)

原材料:Matorial:

1.塑胶:Housing:
Hing Temperature Tnermaplastics,
UI 94V−0 PBT White

2.端子:Contact:Copper Alloy C2680

3.外壳:Shell: Copper Alloy C2680/SPCC

电镀:Finish:

1.端子:Contact: Piated Gold in Mating Area;
Tin On Solder Talls

2.外壳:Shell:
Nickel Plating

GENERAL TOLERANCE						DONGGUAN BAOXUN PRECISION TECHNOLOGY CO., LTD		BXCONN®
DIM.	TOL.					TITLE: USB AF 2.0 侧插连体 弯脚加塞 13.8高		
.x	±0.30							
.xx	±0.20							
.xxx	±0.10							
GENERAL	ANGLE:					DWG. NO.: USB2.0−19.5	CHECKED: MAX	
x.°	±5.0°							
x.x°	±2.0°							
x.xx°						PART NO.: USB2.0−19.5	DRAWN: ELLA	
		UNIT: mm	SCALE: none	SHEET: 1 of 2	DWG. SIZE: A4	LAYER: bxconn	APPROVED: WILL	

WWW.BXCONN.COM 东莞市宝讯精密技术有限公司 ARTICLE: BX−CN−001−A

REV.	DESCRIPTION	ECN NO.	NAME	DATE

步骤1:将好的产品放入指定的托盘内.每盘放100PCS
放满后盖上吸塑盒上盖.

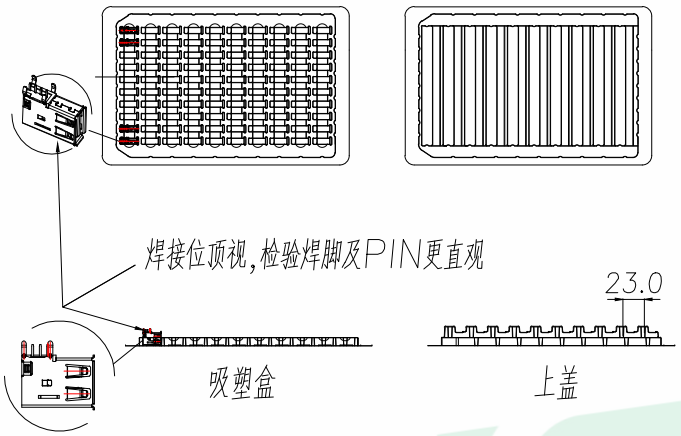

步骤2:将10盘产品叠为一(垛)栈,
使用拉伸膜双十字型固定好.

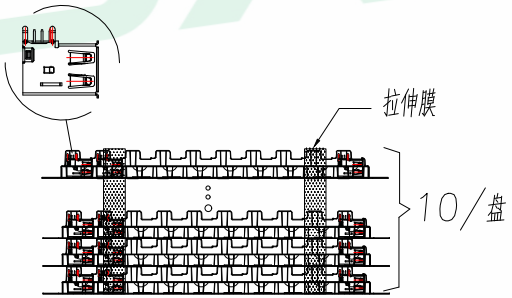

包装规范

步骤3:将固定好的一栈(垛)产品放入纸箱,
(见下图).

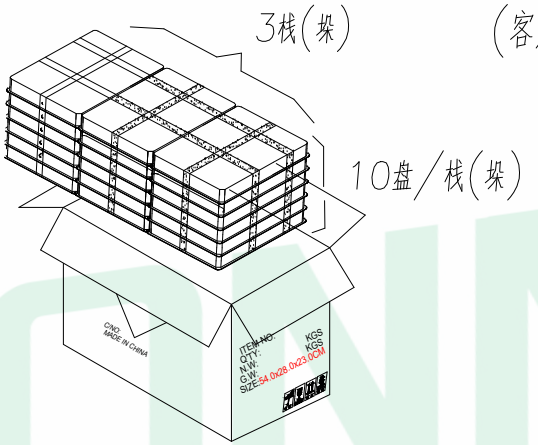

100PCS/盘; 3000PCS/箱

步骤4:外箱规格及外箱标签贴附要求
(客户指定要求之标签及规格参照"客户包装规范")

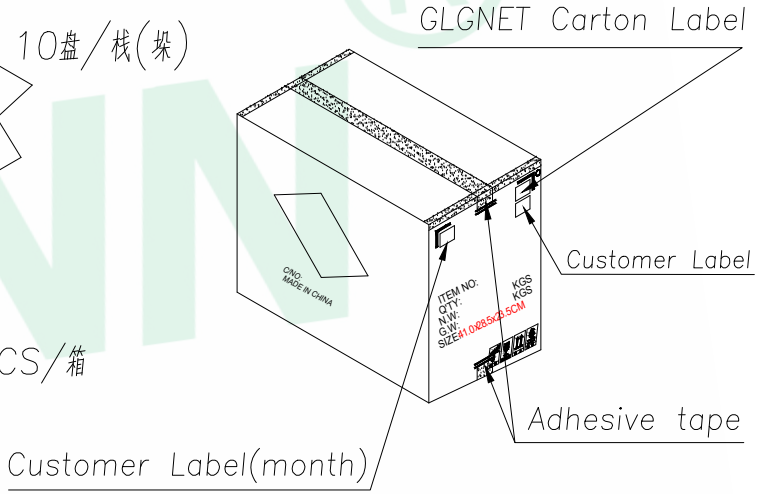

GENERAL TOLERANCE	DONGGUAN BAOXUN PRECISION TECHNOLOGY CO., LTD				BXCONN®
DIM. TOL. .x ±0.30 .xx ±0.20 .xxx ±0.10 GENERAL ANGLE: x.° ±5.0° x.x° ±2.0° x.xx°	TITLE: USB AF 2.0 侧插连体 弯脚加塞 13.8高				
	DWG. NO.: USB2.0-19.5			CHECKED: MAX	
	PART NO.: USB2.0-19.5			DRAWN: ELLA	
	UNIT: mm	SCALE: none	SHEET: 1 of 2	DWG. SIZE: A4	LAYER: bxconn	APPROVED: WILL