承 认 书

APPROVAL SHEET

客户名称 Customer Name	
客户料号 Customer PN	
产品名称 Product Name	超级电容器 Supercapacitor
型号规格 Specification	JEC2.7V10F 10X29.5
厂商料号 Vendor PN	JEC2R7V106L-1029
发行日期 Issue Date	2026-5-18

发行单位 ISSUED EPARTMENT	
深圳市捷而瑞科技有限公司	
制作 PREPARED BY	贺金欢 HE JIN HUAN
批准 APPROVED	李伟业 LI WEI YE

客户承认 APPROVED COLUMN	
□合格 □不合格	
审核 CHECKED	
批准 APPROVED	

贵司确认后，敬请回签一份（After your confirmation, please sign back）

变更履历表
Change Record

序号 No.	日期 Date	版本号 Version No	修订记录 Revision records	校订者 Reviser
1	2026-5-18	A0	新版发行	贺金欢

1. 适用范围 Scope

本产品规格书描述了深圳市捷而瑞科技有限公司（以下简称捷而瑞）生产的超级电容器的产品性能指标。

This product specification describes the characteristics of supercapacitor produced by Shenzhen Shi Jierr Technology Co.,Ltd.

2. 测试条件 Testing Condition

标准测试条件 Test Conditions：

环境温度 Ambient temperature：25±2°C

湿度 Humidity：≤60%RH

标准大气压 Standard atmospheric pressure

3. 一般特性 General Characteristics

NO.	测试项目 Item		规格条件 Specification	备注 Note
1	型号 Model		JEC2R7V106L-1029	
2	标称容量 Rated discharge capacitance		10F	@25°C
3	容量偏差 Capacitance tolerance		-10% ~ +30%	@25°C
4	额定电压 Rated voltage		2.7V	
5	浪涌电压 SV		2.85V	
7	额定电流 Rated current		2.18A	$I=\frac{C\times U}{2(\Delta t+ESR_{DC}\times C)}$,Δt=5s
8	标称内阻 Nominal impedance	交流阻抗 AC Imp. @1kHz	≤ 50 mΩ	
		直流阻抗 DC Imp.	≤ 100 mΩ	
9	最大峰值电流 Maximum peak current (1 s)		6.14A	$I=\frac{C\times U}{2(\Delta t+ESR_{DC}\times C)}$,Δt=1s
10	漏电流 Leakage current (72 h)		≤ 36μA	
11	存储能量 Store energy		10.13 (mWh)	$E_{Max}=\frac{1/2\times CV^2}{3600}\times 1000$
12	能量密度 Energy density		3.10 (Wh/kg)	$E_{Max}=\frac{1/2\times CV^2}{3600\times m}$
13	功率密度 Power density		5.57 (kW/kg)	$P_{Max}=\frac{V^2}{4\times ESR_{DC}\times m}$
14	工作温度 Operating temperature		-40 ~ +70 °C	
15	产品重量 Weight		3.27 g	±0.2

4. 包装方式 Packaging

产品型号 Model	包装数量（只）Quantity(PCS)			包装箱尺寸 Size of Packaging（L×W×H，mm）
JEC2R7V106L-1029	每袋袋装 Tray	每内箱 Inner box	每外箱 Box	外箱 Box
	150	900	5400	420*320*310

备注：当包装数量小于外箱可容纳数量时，将根据数量采用合适的包装标准。

Note: When the packaging quantity is less than the capacity of the outer carton, an appropriate packaging standard will be adopted based on the quantity.

5. 环境性能指标 Environmental Characteristics

NO.	项目 Item	规格条件 Specification Condition
1	温度特性 Temperature characteristics	+70°C时，16h，｜△C/C｜≤30%，ESR≤规定值(25°C) |ΔC/C|≤30% ,ESR≤specified ESR(25°C) at +70°C/16hrs -40°C时，2h,|ΔC/C|≤30% ，ESR≤4倍规定值(25°C) |ΔC/C|≤30%,ESR≤4 times of specified ESR(25°C) at -40°C/2hrs
2	高温负荷特性 High temperature load	+70°C,加额定电压，1000h后，|ΔC/C|≤30% ，ESR≤4倍规定值(25°C) |ΔC/C|≤30%,ESR≤4 times of specified ESR(25°C) at +70°C/1000hrs/rated voltage
3	高温存储 High temperature storage	+70°C ，96h后，|ΔC/C|≤30% ，ESR≤2倍规定值(25°C) |ΔC/C|≤30%,ESR≤2 times of specified ESR(25°C) at +70°C/96hrs
4	湿热特性 Hygrothermal characteristics	+40°C ，90 ~ 95%RH ，240hrs，|ΔC/C|≤30% ，ESR≤4倍规定值(25°C) +40°C,90~95%RH,240h,|ΔC/C|≤30%,ESR≤4 times of specified ESR(25°C)
5	循环寿命 Cycle life	25°C，额定电压到半额定电压间，常温循环充放电 50 万次 25°C, rated voltage-half rated voltage > 500000 cycles |ΔC/C|≤30%，ESR≤4 倍规定值(25°C) |ΔC/C|≤30%, ESR≤4 times of specified ESR(25°C)

6. 尺寸及外形 Product Dimensions

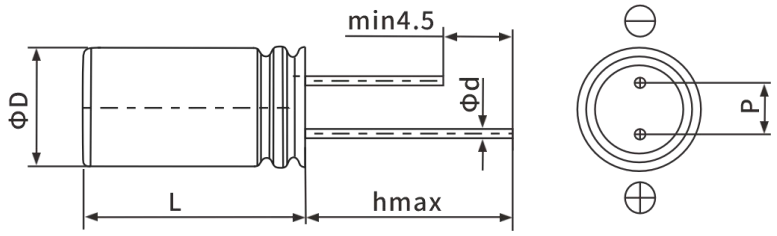

项目 Item	标准 Criteria	项目 Item	标准 Criteria
ΦD	10±1.0 mm	L	29.5±1.5 mm
Φd	0.6±0.1 mm	P	5.0±0.5 mm
h	25max		

7. 命名规则 Part Number system

JEC	2R7	V	205	L	0812
产品系列 Type JEC—常规 JEN—标准 JEG—车规 JET—高温	**额定电压** **Rated voltage** 2R7——2.7V 3R0——3.0V 5R5——5.5V 6R0——6.0V 32R0——32V 108R0——108V	**公差 Tolerance** J——±5% K——±10% V——-10%~30% M——±20% S——-20%~50% Z——-20%~80% N——-30%~80% P—— 0~40% X——-20%~100% R——0~30% Y——-10~80%	**标称容量** **Nominal capacity** 105—— 1.0F 205—— 2.0F 155—— 1.5F 355—— 3.5F 106—— 10F 256—— 25F 107—— 100F	**引出方式** **Termination style** L——导针 N——盖板 X——导线 D——端子线 T——接线端子 P——焊盘	**尺寸 SIZE** 0612——6*12 0812——8*12 1012——10*12 1220——12.5*20

8. 测试方法 The Measurement Methods

8.1 容量测量（恒流放电法） Capacitance（Constant current discharge method）

测试步骤 Test Steps:

1）恒压/恒流源的直流电压设定为额定电压（U_R）

The DC voltage of the constant voltage/constant current source is set to the rated voltage (U_R)

2）根据待测电容的标称容量 C_X ，设置充电和的恒定放电 电流 I，电流设置为 $4*C_X*U_R$

Based on the nominal capacitance CX of the capacitor to be measured, set the constant charging and discharging current I to $4*C_X*U_R$

3）将开关 S 切换到直流电源 ，开始对被测电容进行恒流充电 ，待电容两端电压充电至额定电压 UR 后 ，继续保持充电 30min。

Switch the power supply S to the DC power source to begin constant-current charging of the measured capacitor. After the voltage acr oss the capacitor reaches the rated voltage UR, continue charging for another 30 minutes

4）充电保持 30min 结束后 ，将开关 S 变换到恒流放电装置，以恒定电流进行放电至 0.1V;

After maintaining the charge for 30 minutes, switch S to the constant current discharge device and discharge at a constant current u ntil reaching 0.1V;

5）测量并记录电容器两端电压从U_1到U_2的时间t_1和t_2，如图2所示，根据下列公式计算电容量值:

Measure and record the time t_1 and t_2 for the voltage across the capacitor to change from U1 to U2, as shown in Figure 2. Calculate the cap acitance value using the following formula:

容量测试电路图:

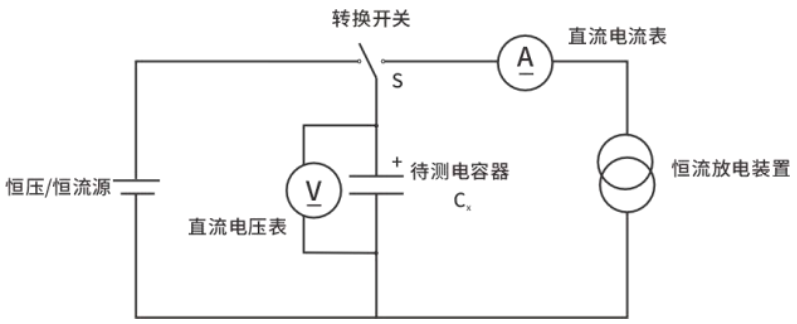

充放电曲线图 Curve for charge-discharge	计算方法 Computing method
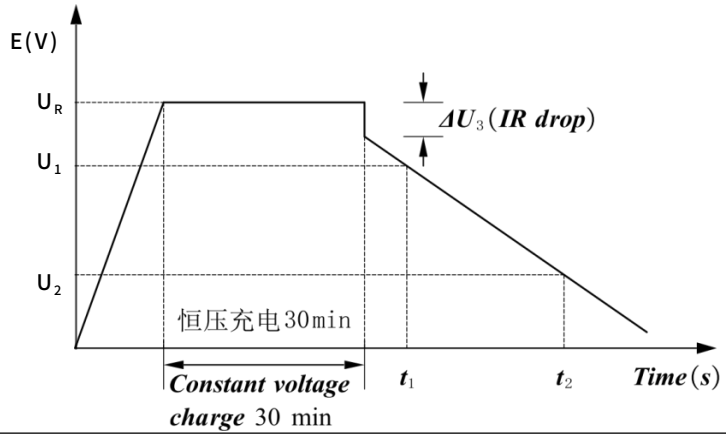	$$C=\frac{I\times(t_2-t_1)}{U_1-U_2}$$ C：容量 The capacitance (F) I：放电电流 The discharge current(A) t_1：放电开始到电压达到 U_1 的时间 The time from discharge start to reach U_1 (s); t_2：放电开始到电压达到 U_2 的时间(s) The time from discharge start to reach U_2 U_1 : 80%UR(V);U_2：40%UR(V)

8.2 内阻测量 AC resistance method

测试原理图 Test schematic	计算方法 Computing method
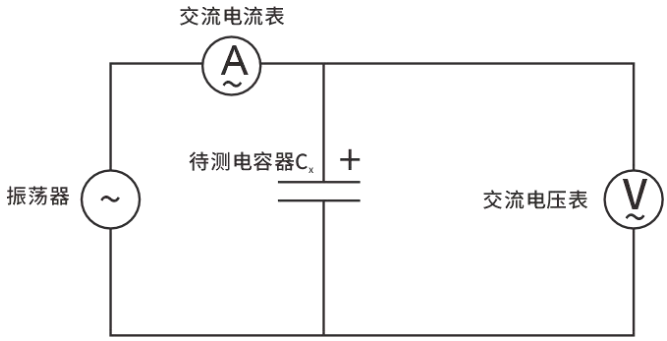	交流阻抗通过交流内阻测试仪测量，测量电压的频率为1kHz，电流为1~10mA Measure AC internal resistance by the LCR meter (Frequency: 1kHz,1~10mA). $$ESR_{AC}=\frac{U_{AC}}{I_{AC}}$$ ESR_{AC}：交流电阻 The Acintemnal resistance U_{AC}：交流电压有效值 (V r. m . s) The effective value of AC Voltage (V r. m . s) I_{AC}：交流电流有效值 (A r. m . s) The effective value of AC Current (A r. m . s)

8.3 漏电流测量 Leakage current

测试步骤 Test Steps：

(1) 测试漏电流前待测超级电容器应充分放电，一般放电1 h以上；

Before this measurement is made, the capacitors shall be fully discharge. Discharge procedure shall take more than 1h;

(2) 在电容器两端加额定电压U_R；

Apply rated voltage to the supercapacitor;

(3) 待超级电容器电压达到额定电压U_R 后，测量串联保护电阻两端电压U_V。

After the voltage of the supercapacitor reaches the rated voltage U_R, the voltage U_V at both ends of the series protection resistor is measured.

漏电流测试电路 Circuit for leakage current method	计算方法 Computing method
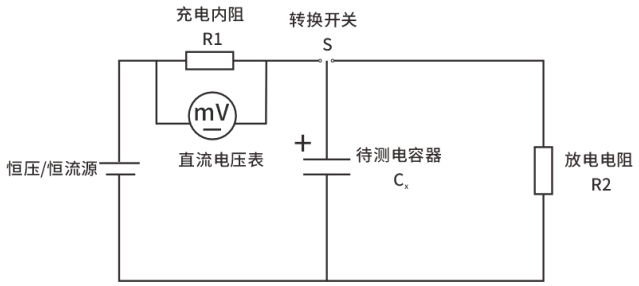	$$L_C=\frac{U_V}{R}\times10^3$$ LC:漏电流 The Leakage current(mA) U_V：串联电阻两端电压(V) The voltage between capacitor terminals(V) R：串联保护电阻(Ω) The protective resistor(Ω)

9. 注意事项与使用指导 Handling Precautions and Guidelines

为了确保安全，当设计的设备需使用超级电容器时，请与捷而瑞联系咨询超级电容器的技术规格以及使用要求。

For safety application, please contact Shenzhen Shi Jierr Technology Co.,Ltd. directly for any technical specifications, handling precautions and guidelines critical to application.

9.1 超级电容器的极性和使用电压 Polarity and voltage of supercapacitor

(1) 超级电容器具有极性，请勿施加反向电压或者交流电压。若长时间施加反向电压不仅会缩短其使用寿命，还可能造成漏液等致命伤害。

Supercapacitor have polarities, Do not apply a reverse or AC voltage. Ifa reversed voltage is applied to a capacitor for a long period oftime, then its life will be reduced and critical failures may occur such as electrolyte leakage.

(2) 超级电容器的额定电压为超级电容器正常工作可使用的最高电压，所以超级电容器两端请勿施加高过额定电压的电压，在高电压下使用不仅会缩短使用寿命，还会因电化学反应造成气体发生量增加，漏液，破裂等致命故障。

Do not apply an over-voltage (a voltage exceeding the rated voltage), If over-voltage is applied to the capacitor for a long time, then its life will be reduced and critical failures such as electrolyte leakage or physical damage due to gas generated by electrochemical reaction or explosion may occur.

9.2 超级电容器在有纹波电流流经电路的使用 Circuits through which ripple currents pass

(1) 超级电容器内部电阻要比其它电解电容器高，纹波电流会使其发热，在预测使用寿命时要加入考虑范围；

(2) 请在加上纹波电流造成的电压变动部分的最大使用电压以下使用；

(3) 超级电容器内部电阻较高，一般不适用于纹波吸收，请用符合用途的低内阻产品。

When using a supercapacitor in a circuit through which ripple currents pass, monitor the allowable temperature rang. The internal resistance of electric supercapacitors is higher than that of electrolytic capacitors. Supercapacitors may generate heat due to ripple currents.

9.3 周围温度对超级电容器的影响 Effect of ambient temperature on the supercapacitor

超级电容器的使用寿命受使用温度的影响，一般情况下，使用温度降低 10 °C，超级电容器的使用寿命会延长 2倍，请尽量在低于最高使用温度的低温环境下使用。超过最高使用温度使用的话，可能会造成特性急剧劣化，破损。超级电容器的使用温度不仅要确认设备周围温度，内部温度，还要确认设备内发热体（功率晶体管、电阻等）的放射热，纹波电流引起的自行发热温度。此外，还请勿将发热体安装在超级电容器的背面。

Supercapacitor life is affected by usage temperatures. Generally speaking, supercapacitor life is approximately doubled when the temperature is decreased by 10°C. Please use in an environment below the maximum operating temperature. Using supercapacitors beyond the maximum operating temperature may cause rapid deterioration of their characteristics and cause them to break down. The temperature referred to here includes the ambient temperature within the equipment, the heat produced by heat generating devices (power transistor, resistors, etc.), self-heating due to ripple currents, etc. Take all of these factors into consideration when checking the supercapacitor’ s temperature. Do not place any heat generating devices on the back of the supercapacitor.

9.4 作为后备电源时的电压降 Voltage drop

当主电源关闭时，超级电容器将从电源失效检验模式转为后备电源工作模式，此时由于瞬间启动电流及电 容内阻将导致开路电压下降。请根据相关产品介绍中所列出的阻抗和使用电流确定正确的产品型号。

Pay particular attention to the instantaneous working current and voltage drop due to the supercapacitor’ s internal resistance when used in backup power operation. Please determine the correct product model based on the impedance and usage current listed in the relevant product introduction.

9.5 串联 Series connection

串联超级电容器时要保证电压平衡，可考虑使用均压保护电路，保证产品电压低于额定电压使用。

When connecting supercapacitors in series, add a bleeder resistor in parallel with each supercapacitor by taking the leak current into consideration so that the balanced of voltages is not disrupted.

9.6 超级电容器的焊接 Solder of supercapacitor

在印刷电路板焊接超级电容器产品时，如果超级电容器热过度应激的话，不仅其电气特性劣化，而且还会因气密性不良以及内压上升造成漏液，短路等超越外观的致命故障，请遵守以下内容：

When soldering a supercapacitor to a printed circuit board, excessive heat stress could cause the deterioration of the supercapacitor’s electrical characteristics. For example, the integrity of the seal can be compromised, causing the electrolyte to leak, and short circuits could occur in addition to failure of appearance：

焊接方式welding method	方法Method
手工焊 Manual soldering	1） 烙铁请勿接触到产品主体； Do not touch the supercapacitor body with a soldering iron; 2） 请将烙铁的温度控制在 350°C以下，焊接持续时间小于4s ，如果连续焊接作业，请预留15秒的时间间隔在3次内焊接完成。 Solder the capacitor using a soldering tip temperature of 350°C or less for 4 seconds or less. Solder the capacitor three times or less at intervals of 15 seconds or more.
波峰焊 Peak soldering	1）焊接时超级电容器请勿接触焊锡槽； Do not dip the body ofthe supercapacitors into a soldering bath; 2）焊接时请将产品主体温度控制在 100°C 60秒以内，峰值温度 105°C以内进行； Keep the supercapacitor’ s surface temperature at or below 100°C for no more than 60 seconds(the peak 105°C) when soldering; 3）标准条件如下图所示。 Refer to the chart below to set soldering conditions.
	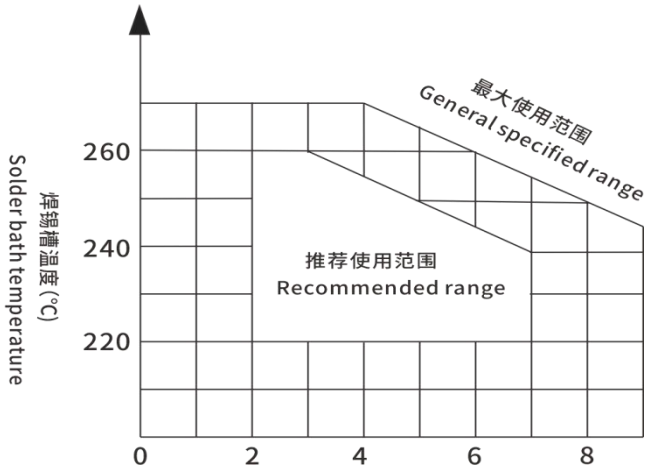
	焊接时间(s) Dipping time 预热温度: 110°C以下(基板表面温度) 100°C以下(产品实体温度) Pre—heating temperature: 110°C or under(on the surface or circuit board) , 100°C or under(on the surface of supercapacitor) 预热时间: 60s 以下 Pre—heating time: 60seconds or under 基板厚度: 0.8MM 以上 Board thickness: 0.8mm or more

备注 Note	1） 使用硬化烤箱烘烤电路板，固定树脂时，请将产品表面温度控制在100°C以下（最高105°C），时间在 60秒以内此外，残余电压在 0.3V以下； Keep the supercapacitor’s surface temperature at or below 100°C for no more than 60 seconds (the peak 105°C) when applying heat to bake the PCB or fixing resin, etc. The residual voltage must be 0.3V or less； 2）在电路板上焊接过一次的产品拆下后请勿再使用，拆卸可能会发生热应激，进行手焊修正时请遵照电烙铁焊接要求； Do not use the product that has been soldered on the circuit board once after removing it, thermal stress may occur when disassembling, please follow the soldering iron soldering requirements when making hand soldering corrections； 拆卸，修正超级电容器周围的零部件时，注意不要让超级电容器过度受热； Be sure not to subject the supercapacitor to excessive heat stress when other parts in its surroundings are detached or adjusted； 3）为提高可焊接性，引线、焊脚上通常会有镀锡层，加工过程中损伤镀锡层会造成产品的可焊接性降低； The lead wires and terminals are tin-plating for solderability. Rasping lead wires or terminals may damage the tin-plating layer and degrade the solderability； 4）对引线焊脚施加强力的话，可能会引起引线焊脚断裂，造成产品性能降低或者失效。 Excessive force on the leads or terminals can cause them to fracture, resulting in reduced performance or failure.

9.7 超级电容器安装使用后的注意事项 Precautions for using supercapacitor equipment

请勿在下列环境中使用装有超级电容器的设备：

Avoid using equipment with ultracapacitors in the following environments:

(1) 水、盐水以及油会直接接触到超级电容器的环境；

Supercapacitors are exposed to water, salt water or oil.

(2) 光直接照射到超级电容器的环境；

Supercapacitors are exposed to direct sunlight.

(3) 高湿状态下，容易在超级电容器表面形成露水的环境；

Supercapacitors are exposed to high-humidity where water can condense on the supercapacitor surface.

(4) 超级电容器会接触到各种活性气体的环境；

Supercapacitors are exposed to various active gases；

(5) 空气中充满酸、碱的环境；

Supercapacitors are exposed to acidic or alkaline environments；

(6) 高频感应的环境；

Supercapacitors are subject to high-frequency induction；

(7) 过度振动，冲击的环境。

Supercapacitors are subject to excessive vibrations or mechanical impact.

9.8 发生紧急情况时注意事项 Emergency procedures

超级电容器发生异常发热的情况时，会从外封装树脂里面产生烟雾。因此应迅速将设备主电源切断终止使用。此外，超级电容器处于高温状态，请勿将脸部、手等身体部位接近超级电容器，以免造成烫伤。

If the supercapacitors generate heat, then smoke may come out of the exterior resin. Under these conditions turn off the equipment immediately and stop using it. Do not place your face or hands close to the supercapacitor, burns may be caused.

9.9 超级电容器的维护和保存 Maintenance and storage of supercapacitors

9.9.1 超级电容的维护 Maintenance of supercapacitor

如果超级电容器长时间没有使用，建议每隔 3个月（最长不建议超过 6个月）充放电 5次进行维护。

If the supercapacitor has not been used for a long time, it is recommended to charge and discharge it 5 times every 3 months (not more than 6 months) for maintenance.

9.9.2 超级电容器的保存 Storage of supercapacitor

请勿将超级电容器保存在高温、高湿的环境中，建议在温度 25±10 °C，相对湿度小于 80%的环境中且包装完好的状态下保存（建议保存期限不要超过 6个月）。

Do not store supercapacitors in a high-temperature or high-humidity environment. Store supercapacitor at a room temperature of 25±10°C and a relative humidity of 80% or less(It is recommended that the storage period should not exceed 6 months).

请勿在以下环境中保存：

Avoid storing capacitors under the following conditions：

(1) 水接触到超级电容器或高温高湿，产生结露的环境；

Exposed to water, high temperatures or humidity, or when condensation can occurs；

(2) 油接触到超级电容器或充满油成分空气的环境；

Exposed to oil or in environments filled with gaseous oil contents；

(3) 盐水接触到超级电容器或充满盐分的环境；

Exposed to salt water or environments filled with saline substances；

(4) 充满酸性有害气体（硫化氢、亚硫酸、氯气、溴、甲基溴等）的环境；

In environments filled with harmful gases (hydrogen disulfide, sulfurous acid, nitrous acid, chlorine, bromine, bromomethane, etc.；

(5) 酸性、碱性溶剂会接触到的环境；

Exposed to acid or alkaline solvents；

(6) 直射阳光，臭氧，紫外线以及放射线直接照射的环境；

Exposed to direct sunlight, ozone, ultraviolet or radial rays；

(7) 会给超级电容器带来振动冲击的环境。

Exposed to vibrations or mechanical impact.

9.10 超级电容器的报废 Discarding of supercapacitor

超级电容器由各种金属、树脂构成，因此报废时请按工业废弃物处理。

Dispose of supercapacitor as industrial waste. They are comprised ofvarious metals and resin.

10. 免责声明 Products Disclaimer

产品使用前，请用户仔细阅读本产品规格书，捷而瑞科技有限公司对因没有按本规格书规定操作而导致的意外不负责任。若出现产品使用方法错误、电路连接不对或采用的输入电源产品说明书所标性能参数不符等现象均属使用不当，由使用不当造成产品、负载及周边连接件的损坏（人身安全），本公司均不承担相关责任。在不改变产品性能的情况下，产品如有升级，恕不另行通知。

捷而瑞科技有限公司对本说明书的内容保留更改的权利，内容如有变动，恕不另行通知；该资料的最终解释权归本公司所有。

Before using the supercapacitor, please read the specifications, usage instruction and some attentions carefully.

Shenzhen Shi Jierr Technology Co.,Ltd. is not responsible for the incident caused by not obeying the Manual. The phenomenon such as incorrect using method or wrong circuit connection, working index are inconsistent with the Manual, cause damage to product, over load and its accessories, we are not responsible for it. Without changing the performance of the product, any upgrades to the product will be made without prior notice.

Shenzhen Shi Jierr Technology Co.,Ltd. has the right to change the content of specification without prior notice. The final explanation of specification belongs to Shenzhen Shi Jierr Technology Co.,Ltd.