ROHS

REV.	ECN NO.	DESCRIPTION	DRAW	DATE

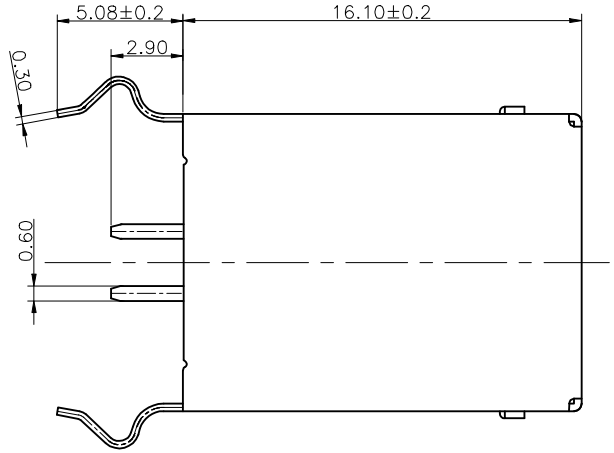

MATERIAL:
1.1 Housing: PBT, UL94-HB
1.2 Terminals: Copper Alloy
Gold plated in contact area;
Tin 40u"min plated in termination
Nickel Plated overall
1.3 Shell: SPCC t=0.30mm,
Nickel 40u"min Plated overall
2 ELECTRICAL CHARACTERISTICS:
2.1 Rating Current: 1.5 Ampere
2.2 Rating Voltage: 50 V Max
2.3 Contact Resistance: 30 Milli ohms
2.4 Insulation Resistance: 1000 Mega ohms Min.
2.5 Dielectric Withstanding Voltage: 500 V AC
MECHANICAL CHARACTERISTICS:
3.1 Connector Mating force: 35N MAX (3.57Kgf)
3.2 Connector Unmating force: 10N min (1.02Kgf)
3.3 Durability: 1500Cycles
4 ENVIRONMENT CHARACTERISTICS:
4.1 Operating temperature: -0℃ to +50℃
4.2 Storage temperature: -20℃ to +60℃

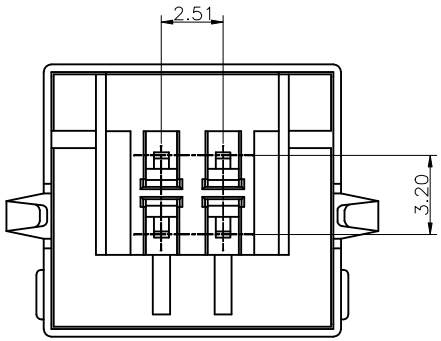

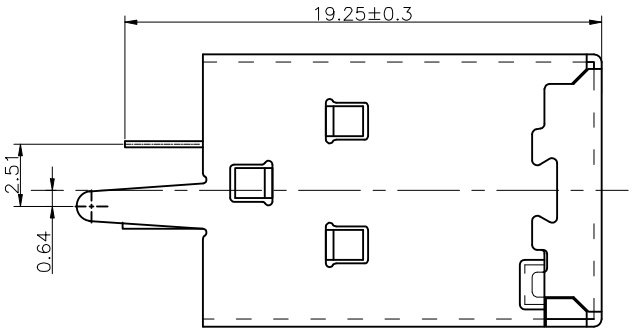

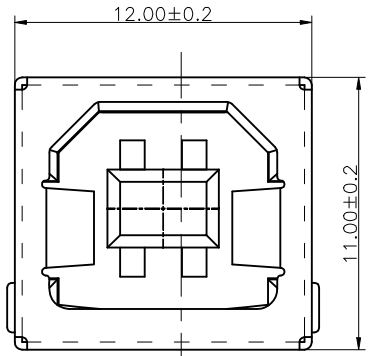

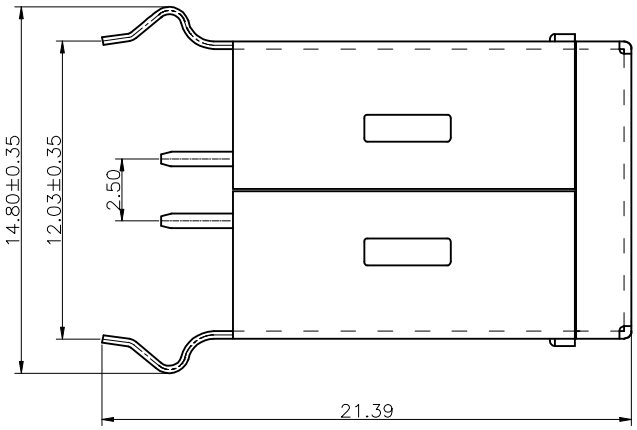

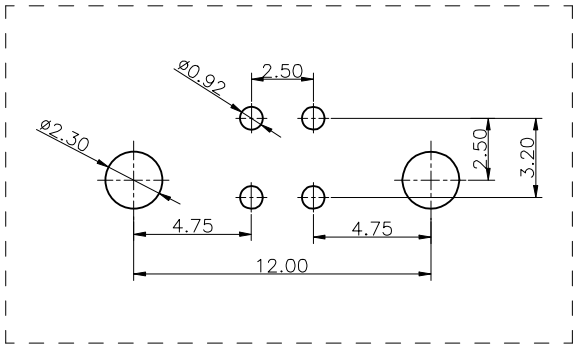

PCB LAYOUT

Pin Definition

PIN	Signal Name	Describe
1	VBUS	+5V
2	D-	Negative Data Channel
3	D+	Positive Data Channel
4	GND	Ground

COSTOMER DRAWING			LAILAN 深圳市莱联电子有限公司 SHENZHEN LAILIAN ELECTRONICS CO.,LTD		
DRAWING					
CHECK					
APPROVAL			TITLE	TYPE-B连接器4PIN-直插H16.1	REV. A
TOLERANCES ARE					
30-150	±0.35	ANGLE	PART NO.	LAIL-TYPE-B-4P-01-ZC	UNITS mm
10-30	±0.2				
5-10	±0.15	±3°	DWG.NO.		Projection
0-5	±0.1				