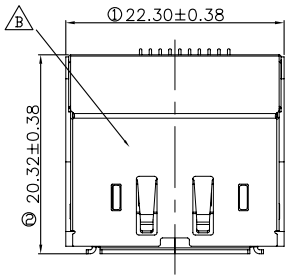

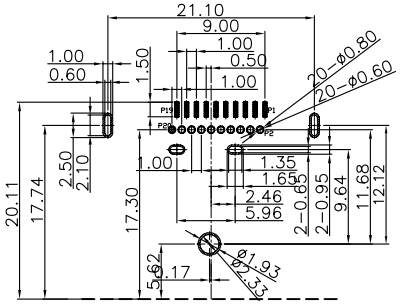

RECOMMENDED P.C.B. LAYOUT

TOLERANCE±0.05

TOP VIEW

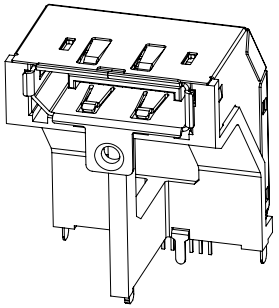

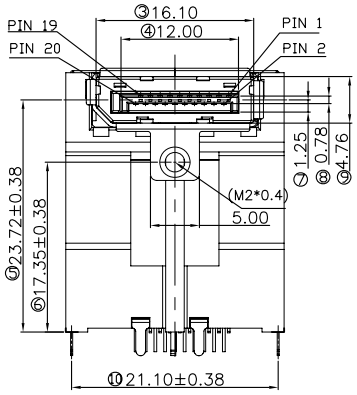

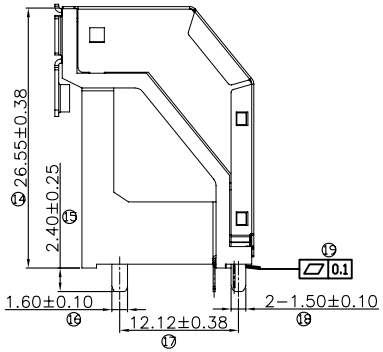

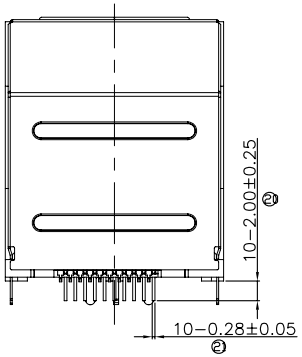

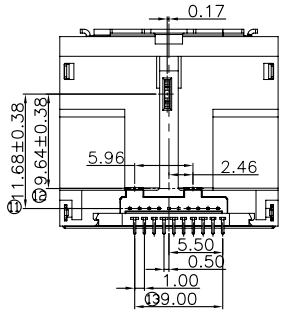

SPECIFICATION

1. CURRENT RATING : 0.5A. MAX.
2. DIELECTRIC WITHSTANDING VOLTAGE 500V AC R.M.S. FOR ONE MINUTE.
3. INSULATION RESISTANCE : 100MΩ MIN. AT 500V DC
4. CONTACT RESISTANCE : 30mΩ MAX.
5. OPERATING TEMPERATURE : −25℃ TO +85℃.
6. DURABILITY : 10000 CYCLES.
7. MATING FORCE : 4.5kgf MAX.
8. UNMATING FORCE : 1.0kgf MIN.

MATERIALS

1. HOUSING : LCP (UL94V−0),BLACK.
2. BRACKET : LCP (UL94V−0),BLACK.
3. TERMINAL: COPPER ALLOY
   GOLD FLASH PLATED ON CONTACT AREA, MATTE TIN PLATED ON SOLDER TAILS, NICKEL UNDER 50u"MIN 100u"MIN PLATED OVER ALL.
4. SHELL:STAINLESS STEEL
5. EMI SHELL(BACK): STAINLESS STEEL NICKEL 50u"MIN PLATED OVERALL
6. EMI SHELL(FRONT): STAINLESS STEEL. NICKEL 50u"MIN PLATED OVERALL
7. BOARD LOCK: SPCC TIN 100u"MIN PLATED OVERALL.

SOURCE SIDE

PIN NO.	PIN NAME
1	ML_Lane 0 (p)
2	GND
3	ML_Lane 0 (n)
4	ML_Lane 1 (p)
5	GND
6	ML_Lane 1 (n)
7	ML_Lane 2 (p)
8	GND
9	ML_Lane 2 (n)
10	ML_Lane 3 (p)
11	GND
12	ML_Lane 3 (n)
13	CONFIG1
14	CONFIG2
15	AUX CH (p)
16	GND
17	AUX CH (n)
18	Hot Plug Detect
9	Return
20	DP_PWP

SINK SIDE

PIN NO.	PIN NAME
1	ML_Lane 3 (n)
2	GND
3	ML_Lane 3 (p)
4	ML_Lane 2 (n)
5	GND
6	ML_Lane 2 (p)
7	ML_Lane 1 (n)
8	GND
9	ML_Lane 1 (p)
10	ML_Lane 0 (n)
11	GND
12	ML_Lane 0 (p)
13	CONFIG1
14	CONFIG2
15	AUX CH (p)
16	GND
17	AUX CH (n)
18	Hot Plug Detect
19	Return
0	DP_PWR

深圳市华宇创精密电子有限公司

HOAUC

TOLERANCE: X.X ±0.30 X.XX ±0.25 X.XXX ±0.15 X.° ±2° X.X° ±0.5°	DRAWED BY : 陈一鸣	DATE : 2014-02-23	PART NAME: DP 加高（H=23.72）
	CHECKED BY: 马跃	DATE : 2014-02-23	PART NO. HYCW22-DP20-265B
UNIT: mm [inch]	APPROVED BY: 邱国夷	DATE : 2014-02-23	MOLD NO. / DRAW NO: HYC-1804191414
SCALE:1:1 SIZE: A4			SHEET NO. 1 OF 1