Features

- Molding Inductor,low noise.
- Low core loss.
- Large Current.
- Halogen Free ,ROHS compliance.
- Operating temperature:-55℃ ~ +155℃（Including self-temperature rise）.
- Reliability test complied to AEC-Q200.

Applications

- SSD modules.
- Base stations.
- Battery powered devices.
- Laptops and PCs.
- Servers and Switch.
- DC/DC converter.

Product Identification

YASPI	□□□□□	–	□□□	□	□□□
(1)	(2)		(3)	(4)	(5)

(1)： Type

(2)： Dimensions

(3)： Inductance value

(4)： Inductance Tolerance： N=±30%,M=±20%

(5)： Internal code

Shapes and Dimensions (Unit： mm)

Example diagram

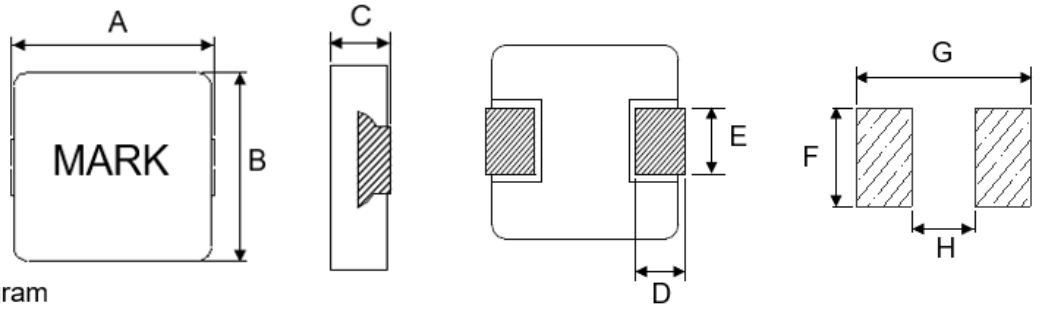

TYPE	A	B	C	D	E	F Typ.	G Typ.	H Typ.
YASPI1040S	10.85±0.35	10.0±0.30	3.80±0.20	2.50±0.50	4.50±0.30	4.95	12.07	5.80

■ YASPI1040S Series

Part Number	Inductance L0(μH)	DC Resistance (mΩ)	Heat Rating Current Irms(A)		Saturation Current Isat(A)		Rated Voltage (V)
	@100KHz/1V	Max.	Typ.	Max.	Typ.	Max.	Max.
YASPI1040S-1R0M	1.0±20%	3.1	23.7	21.3	20.4	17.5	75
YASPI1040S-1R5M	1.5±20%	5.0	18.7	15.8	16.6	13.0	75
YASPI1040S-2R2M	2.2±20%	8.8	12.3	11.1	13.9	11.9	75
YASPI1040S-3R3M	3.3±20%	11.8	11.0	9.9	12.0	10.3	75
YASPI1040S-4R7M	4.7±20%	15.0	9.8	8.8	11.0	9.4	75
YASPI1040S-6R8M	6.8±20%	21.5	9.1	8.2	9.6	8.2	75
YASPI1040S-8R2M	8.2±20%	29.0	7.7	6.9	7.1	6.1	75
YASPI1040S-100M	10±20%	33.0	7.5	6.8	6.4	5.5	75
YASPI1040S-150M	15±20%	49.0	6.0	5.4	5.4	4.6	75
YASPI1040S-220M	22±20%	73.3	5.0	4.5	4.6	3.9	75
YASPI1040S-330M	33±20%	102.0	4.0	3.6	4.2	3.5	75
YASPI1040S-470M	47±20%	178.0	3.0	2.7	3.2	2.7	75

※ All test data is referenced to 25°C ambient.

※ Isat(A):DC current (A) that will cause L0 to drop approximately 20%.

※ Irms (A):DC current (A) that will cause an approximate ΔT of 40°C(reference ambient temperature is 25°C)

※ The rated current as listed is either the saturation current or the heating current depending on which value is lower.

※ The part temperature (ambient + temp rise) should not exceed 155°C under worst case operating conditions. Circuit design, component placement, PWB trace size and thickness, airflow and other cooling provisions all affect the part temperature. Part temperature should be verified in the end application.

※ Storage temperature and humidity range (product with tapping):-10℃~+40℃,RH70% Max.

※ Cleaning Process Note

(a) If this power choke is dipped in the cleaning agent, such as toluene, xylene, ketone, and ether system,there is a possibility that the performance decreases greatly.

(b) The high power ultrasonic washing may damage the choke body.

(c) Please contact us if you need the cleaning via the above agents or ultrasonic washing.

■ Mechanical Reliability

<table>
<tr><th>Item</th><th>Specification and Requirement</th><th>Test Method</th></tr>
<tr><td>Solderability</td><td>1.No case deformation or change in appearance.
2.New solder coverage More than 95%</td><td>1.Preheat:155℃±5℃,60S±2S.
2.Tin: lead-free.
3.Temperature:240℃±5℃, flux 3.0S±0.5S.</td></tr>
<tr><td>Mechanical shock</td><td>1. No case deformation or change in appearance.
2. △L/Lo≦±10%.</td><td>1. Acceleration:100G.
2. Pulse time:6ms.
3. Direction: ±X ±Y ±Z.
4. 3 times in each positive and negative direction of 3 mutual perpendicular directions.</td></tr>
<tr><td>Mechanical vibration</td><td>1. No case deformation or change in appearance
2. △L/Lo≦±10%</td><td>1. Reflow: 2times.
2.Frequency:10HZ ~ 55HZ ~ 10HZ,20 Min/Cycles
3. Amplitude:1.52 mm.
4. Directions: X,Y,Z.
5. Time:12 cycle / direction.</td></tr>
<tr><td>Thermal Shock</td><td>Inductance change:Within ±10%
Without distinct damage in appearance</td><td>1.First -55℃ for 30 minutes,last 155℃ for 30 minutes as 1 cycle. Go through 1000 cycles.
2. Max transfer time is 3 minutes.
3. Measured at room temperature after placing for 24±2 hours.
<table>
<tr><th></th><th>Temperature</th><th>Duration</th></tr>
<tr><td>1</td><td>-55±2℃
(Themostat No.1)</td><td>30 min.</td></tr>
<tr><td>2</td><td>Standard atmospheric</td><td>Within 3 minutes
No.1→No.2</td></tr>
<tr><td>3</td><td>155±2℃
(Themostat No.2)</td><td>30 min.</td></tr>
<tr><td>4</td><td>Standard atmospheric</td><td>Within 3 minutes
No.2→No.1</td></tr>
</table></td></tr>
<tr><td>Humidity Resistance</td><td>Inductance change:
Within ± 10% Without distinct damage in appearance</td><td>1.Reflow 2 times,
2.85℃,85%RH,1000 hours
3.Measured at room temperature after placing for 24±2 hours</td></tr>
<tr><td>Low temperature storage</td><td>Inductance change:
Within ±10% Without distinct damage in appearance.</td><td>1. Temperature:-55 ± 2℃.
2. Time:1000 hours.
3. Measured at room temperature after placing for 24±2 hours.</td></tr>
<tr><td>High temperature storage</td><td>Inductance change:
Within ± 10% Without distinct damage in appearance.</td><td>1. Temperature:+155 ± 2℃.
2. Time:1000 hours.
3. Measured at room temperature after placing for 24±2 hours.</td></tr>
</table>

■ Taping Dimensions(Unit:mm)

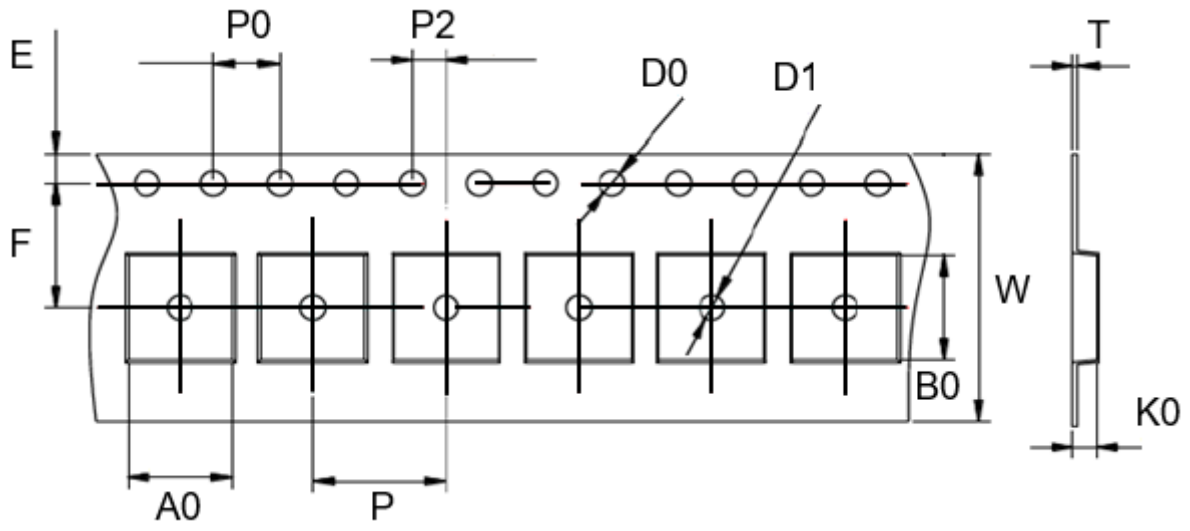

TYPE	W	P	P0	P2	D0	D1	T	A0	B0	K0	E	F	MPQ
YASPI1040S	24.0 ±0.3	16.0 ±0.1	4.0 ±0.1	2.0 ±0.1	1.5 ±0.1	1.5 ±0.1	0.40 ±0.05	10.5 ±0.1	11.7 ±0.1	4.4 ±0.1	1.75 ±0.1	11.5 ±0.1	500

■ Reel Dimensions(Unit:mm)

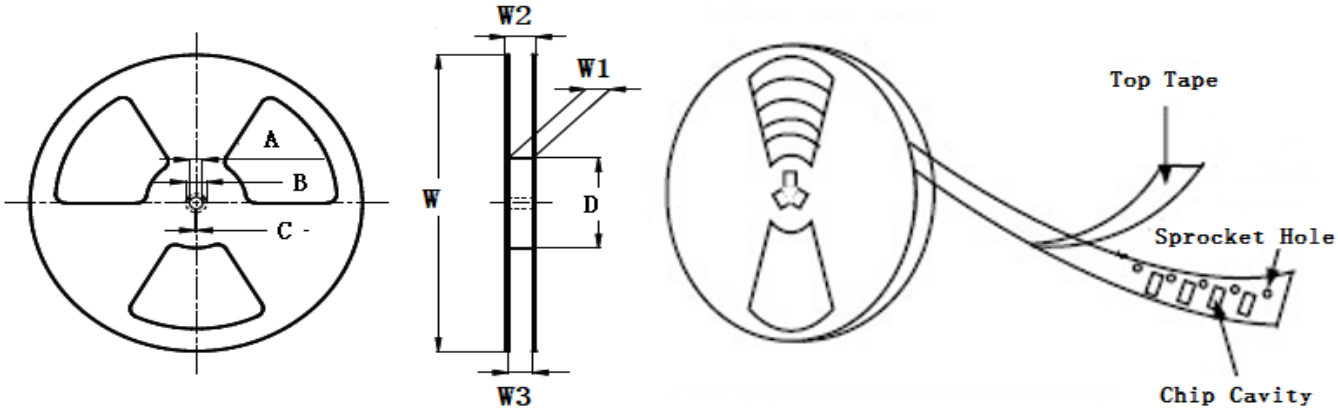

TYPE	W	W1	W2	W3	A	B	C	D
YASPI1040S	330±2.0	24.4±1.5	30.4MAX	23.9 Min	13.0±0.5	21.0±0.8	2.0±0.5	97.0±0.5

■ Direction of rolling

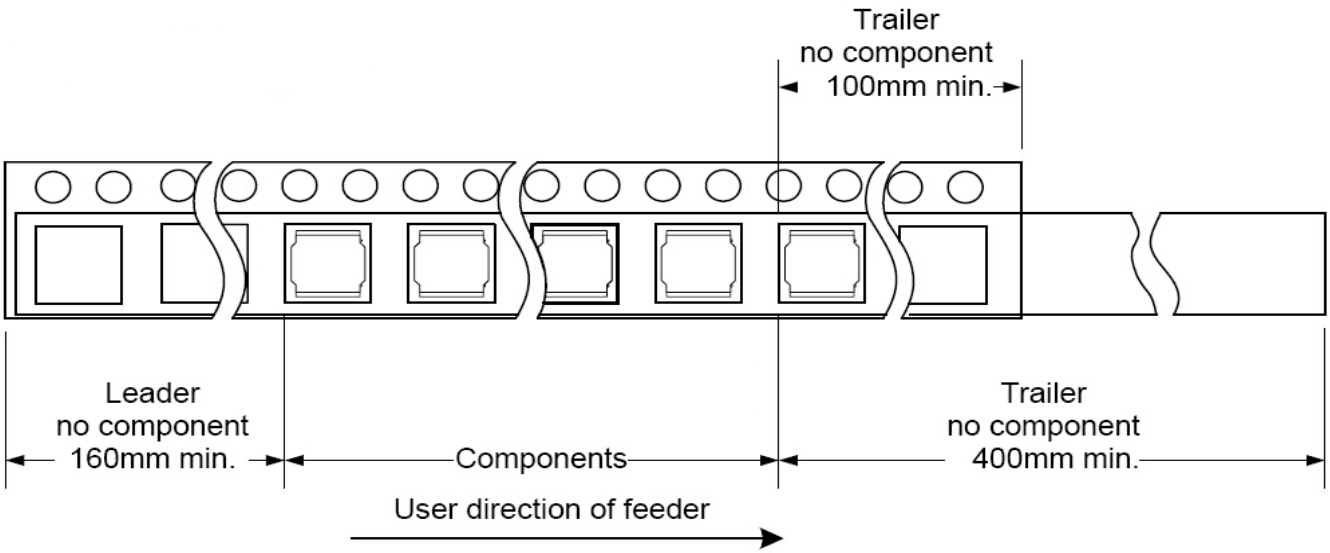

■ Cover tape peel off condition

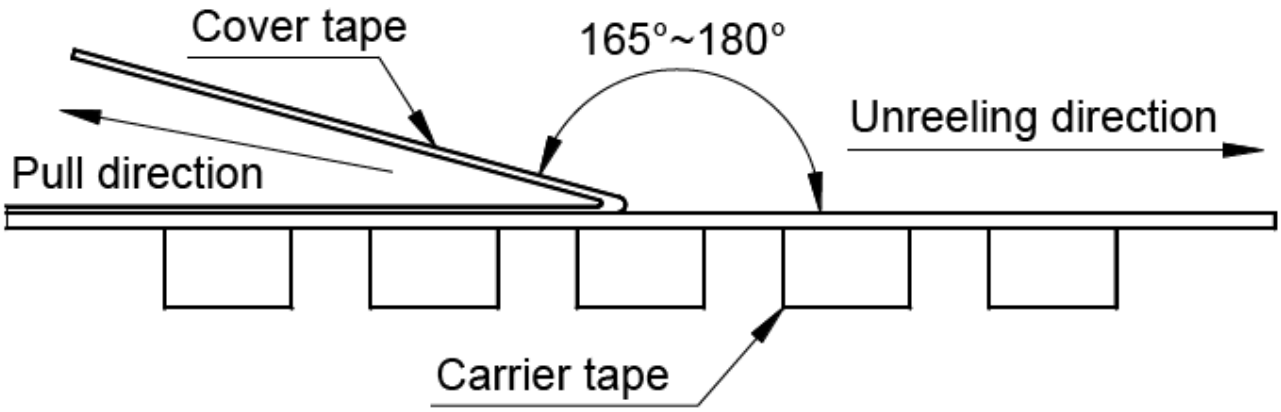

Cover tape peel force shall be 0.1N to 1.3N.

Reference peel speed 300±10mm/min.