ROHS

REV.	ECN NO.	DESCRIPTION	DRAW	DATE

NOTE:
1. MATERIAL:
   HOUSING: HIGH TEMPERATURE THERMOPLASTIC(UL94V-0), COLOR: NATURAL.
   CONTACTS: COPPER ALLOY.
   PEG: COPPER ALLOY.
   ACTUATOR: HIGH TEMPERATURE THERMOPLASTIC(UL94-V0).
2. RATING:
   OPERATING VOLTAGE: 50Vrms AC.
   CURRENT RATING: 0.5A.
   OPERATING TEMPERATURE: -55°C~+85°C.
   OPERATING HUMIDITY RANGE: RELATIVE HUMIDITY 90% MAX.(NO CONDENSATION)
   STORAGE TEMPERATURE RANGE: -10°C~+50°C.
   STORAGE HUMIDITY RANGE: RELATIVE HUMIDITY 90% MAX.(NO CONDENSATION)
   INSULATION RESISTANCE >500MΩ.
   WITHSTAND VOLTAGE: 200V/1 MINUTE.

12PIN

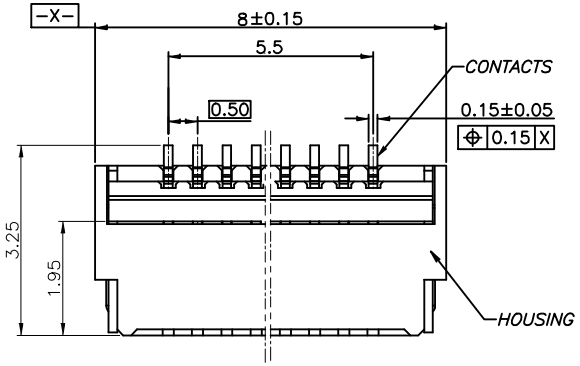

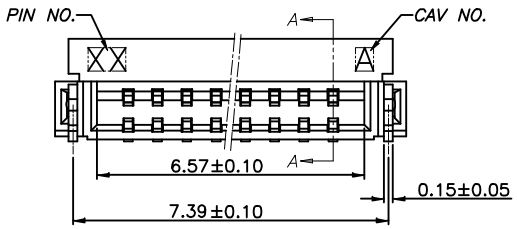

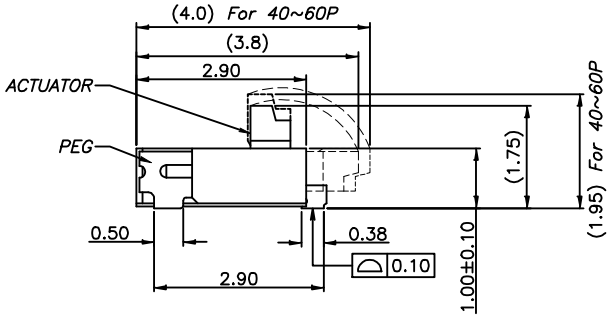

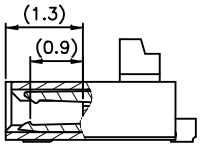

SECTION A-A

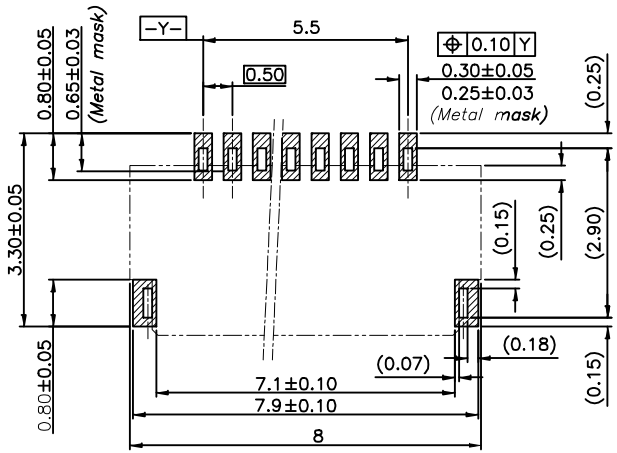

Recommended PCB mounting pattern and metal mask dimensions

Recommended metal mask thickness: t=0.1

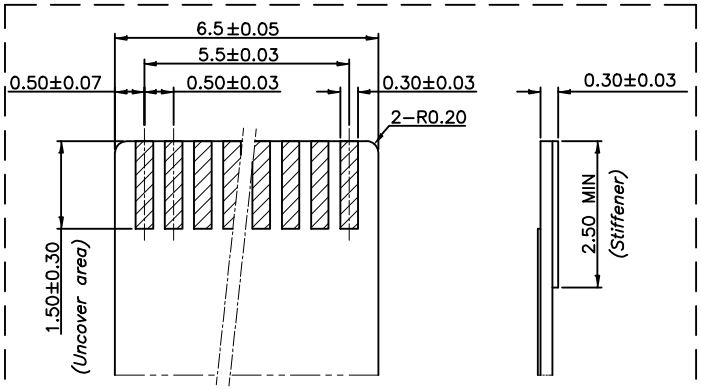

Recommended FPC/FFC Dimensions

COSTOMER DRAWING			LAILAN 深圳市莱联电子有限公司 SHENZHEN LAILIAN ELECTRONICS CO.,LTD			
DRAWING			TITLE	FPC连接器0.5间距12PIN翻盖式双侧触点上下接	REV.	A
CHECKED						
APPROVED			PART NO.	LAIL-FPC-CDX01-12P0.5-GW	UNITS	mm
TOLERANCES ARE						
30-150	±0.35	ANGLE	DWG. NO.		Projection	
10-30	±0.2					
5-10	±0.15	±3°				
0-5	±0.1					