VOLTAGE RANGE
20 to 60 Volts
CURRENT
5.0 Ampere

FEATURES

* Ideal for surface mount applications
* Easy pick and place
* Built-in strain relief
* Low forward voltage drop

MECHANICAL DATA

* Case: Molded plastic
* Epoxy: UL 94V-0 rate flame retardant
* Terminals: Solder plated, solderable per MIL-STD-202F method 208 guranteed
* Polarity: Color band denotes cathode end
* Mounting position: Any
* Weight: 0.063 gram

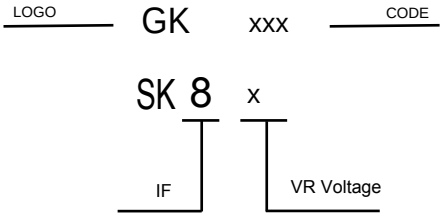

MAXIMUM RATINGS AND ELECTRICAL CHARACTERISTICS

Rating 25°C ambient temperature uniess otherwies specified.
Single phase half wave, 60Hz, resistive or inductive load.
For capacitive load, derate current by 20%.

TYPE NUMBER	SK82	SK83	SK84	SK85	SK86	UNITS
Maximum Recurrent Peak Reverse Voltage	20	30	40	50	60	V
Maximum RMS Voltage	14	21	28	35	42	V
Maximum DC Blocking Voltage	20	30	40	50	60	V
Maximum Average Forward Rectified Current See Fig. 1	8.0					A
Peak Forward Surge Current, 8.3 ms single half sine-wave superimposed on rated load (JEDEC method)	175					A
Maximum Instantaneous Forward Voltage at 8.0A	0.55			0.70		V
Maximum DC Reverse Current Ta=25°C	0.1					mA
at Rated DC Blocking Voltage Ta=100°C	5					mA
Typical Junction Capacitance (Note1)	380					pF
Typical Thermal Resistance R_{JL} (Note 2)	10					°C/W
Operating Temperature Range T_J	-65 — +150					°C
Storage Temperature Range T_{STG}	-65 — +150					°C

NOTES:

1. Measured at 1MHz and applied reverse voltage of 4.0V D.C.

2. Thermal Resistance Junction to Lead.

RATING AND CHARACTERISTIC CURVES

FIG.1-TYPICAL FORWARD CURRENT DERATING CURVE

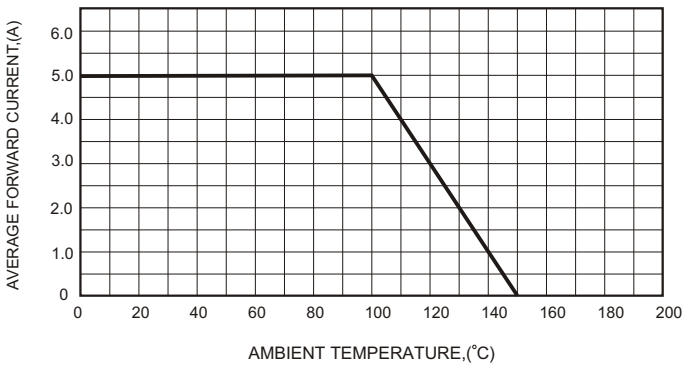

FIG.2-TYPICAL FORWARD CHARACTERISTICS

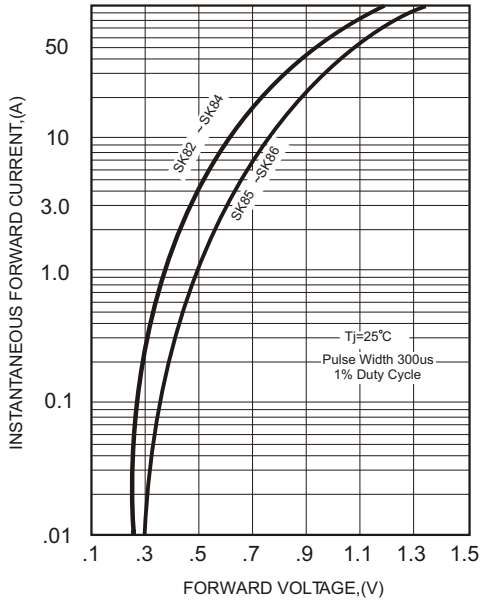

FIG.3 - TYPICAL REVERSE CHARACTERISTICS

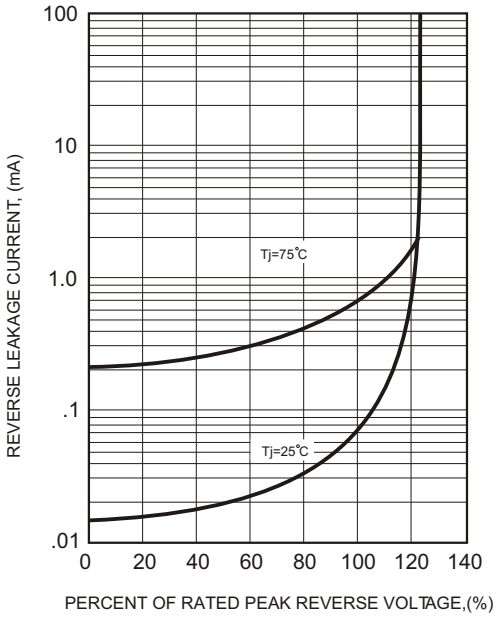

FIG.4-MAXIMUM NON-REPETITIVE FORWARD SURGE CURRENT

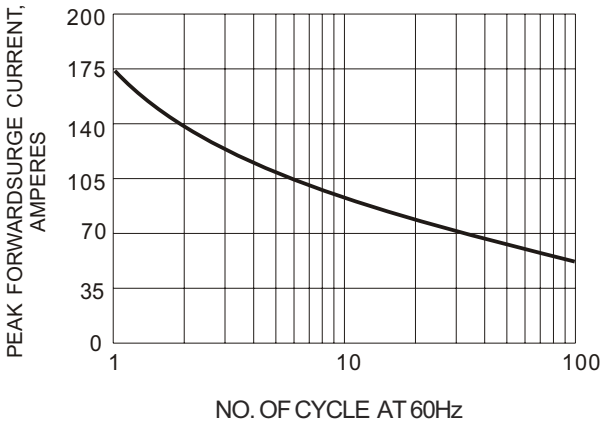

FIG.5-TYPICAL JUNCTION CAPACITANCE

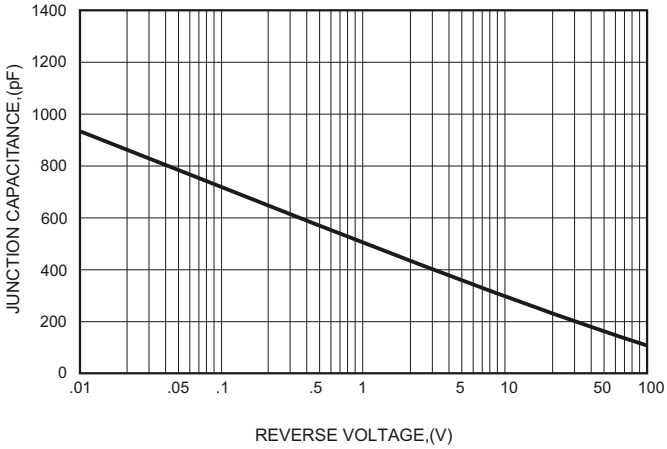

Soldering parameters

Reflow Condition		Pb-Free assembly (see as bellow)
Pre Heat	-Temperature Min ($T_{s(min)}$)	+150℃
	-Temperature Max($T_{s(max)}$)	+200℃
	-Time (Min to Max) (ts)	60-180 secs.
Average ramp up rate (Liquid us Temp (T_L) to peak)		3℃/sec. Max
$T_{s(max)}$ to T_L - Ramp-up Rate		3℃/sec. Max
Reflow	-Temperature(T_L)(Liquid us)	+217℃
	-Temperature(t_L)	60-150 secs.
Peak Temp (T_p)		+260(+0/-5)℃
Time within 5℃ of actual Peak Temp (t_p)		30 secs. Max
Ramp-down Rate		6℃/sec. Max
Time 25℃ to Peak Temp (T_P)		8 min. Max
Do not exceed		+260℃

FIG5: Reflow condition

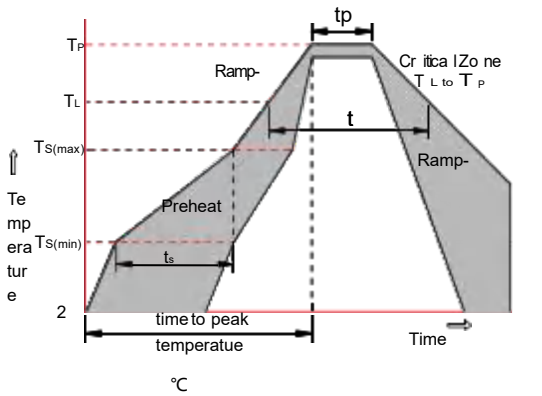

Package Dimensions & Suggested Pad Layout

SMC

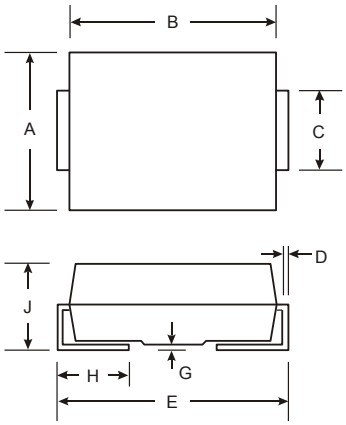

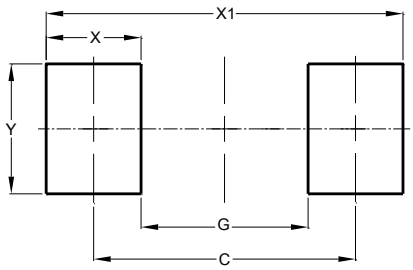

SMC		
Dim	**Min**	**Max**
A	5.59	6.22
B	6.60	7.11
C	2.75	3.15
D	0.15	0.31
E	7.75	8.13
G		0.20
H	0.76	1.52
J	2.00	2.62
All Dimensions in mm		

Dimensions	Value (in mm)
C	7.60
G	4.10
X	3.50
X1	11.10
Y	4.50

Tape & rell specification

Tape

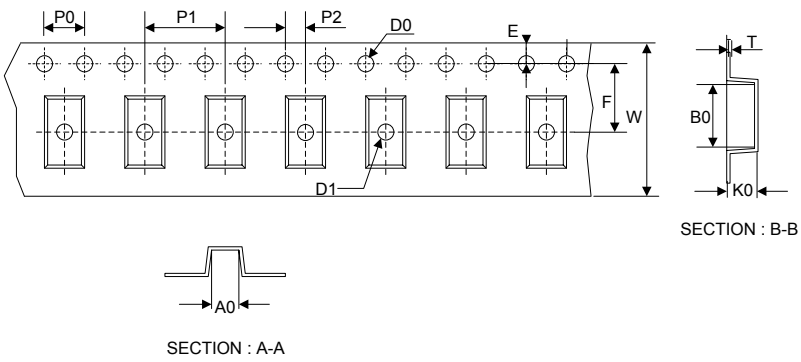

Symbol	Dimension (mm)
P0	4.00±0.20
P1	8.00±0.20
P2	2.00±0.20
D0	1.60±0.20
D1	1.60±0.20
E	1.75±0.20
F	7.50±0.20
W	16.00±0.20
A0	6.30±0.20
B0	8.20±0.20
K0	2.60±0.20
T	0.23±0.10

13” Reel

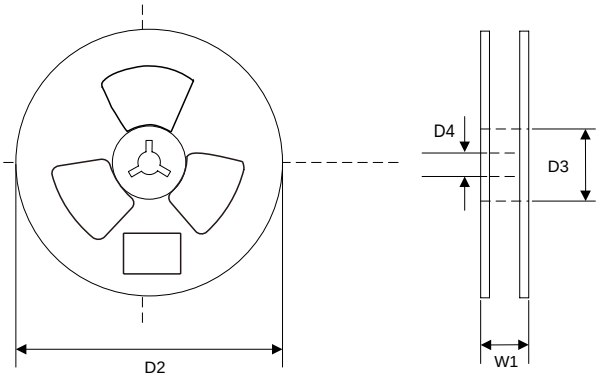

D2	330.0±5.0
D3	73Min.
D4	16.0±2.5
W1	20.0±2.0
Quantity: 3000PCS	