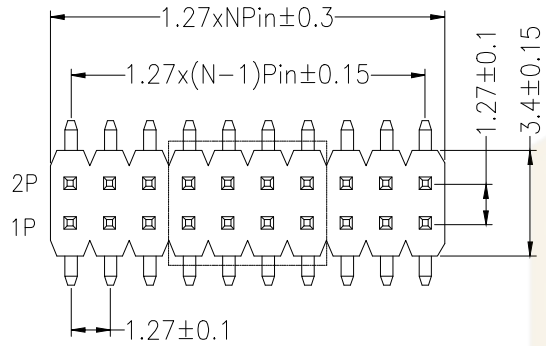

Recommended P.C.B Layout(Top Side)
(PCB BOARD TOLERANCE±0.05)

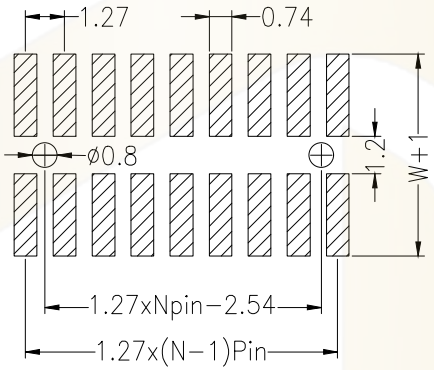

SPECIFICATIONS
Rated Current:1.0AMP
Contact Resistance:20mΩ Max
Withstand Voltage:500V AC/DC
Insulation Resistance:1000MΩ Min
Operation Temperature:-40°c to +105°c

Contact Material:Brass
Contact Plating:Au or Sn Over Ni
Insulator Material:Polyester(UL94V-0)
Standard: PA6T
Max.Processing Temp: 230°C for 30-60 seconds
(260°C for 10 seconds)

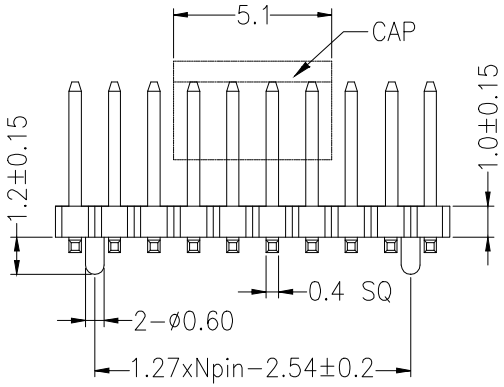

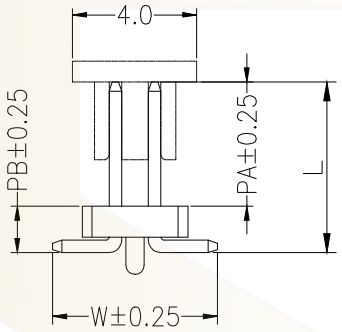

P = With Post

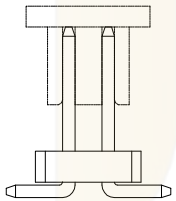

默认= W/O Post

Dimension antitheses list				
ITEM	PA	PB	W	L
Standard	3.80	1.50	5.50	5.30

Ordering Information

PZ 127 - * - N - * - * - ** - * - P

- No.of Rows: 1=Single Row, 2=Dual Row
- No.of Pins: 2-50Pin
- Type: Z=直针, W=弯针, S=立贴, WS=卧贴, WW=反弯
- Length: (塑高)
- Contact Plating: G0:Gold Flash, G1:1u" Gold, G2:3u" Gold, G3:5u" Gold, G4:10u" Gold, G5:15u" Gold, G6:30u" Gold, S0:Gold Flash/Tin, S1:Tin
- Packing: R=Reel +Cap (编带+盖)
- Post: (带柱)

深圳市华灿天禄电子有限公司
工程专用章

序号 No.	变更内容 MODIFY CONTENT	日期 MODIFY DATE
1	初版发行	

GENERL TOLERANCE	
DIM	TOL
X.X	±0.30
X.XX	±0.20
X.XXX	±0.10
Angle	±3.0°

制图 DRAWING	
审核 CHECK	
批准 APPROVAL	
比例 SCALE	
投影 Projection	

深圳市华灿天禄电子有限公司
ShenzhenhuacantianluELECTRONICS CO.,LTD

产品名称 TITLE	1.27 双排 排针 贴片 编带+盖 (塑高1.0)	版本 REV.	A
产品料号 PART NO.	PZ127-2-N-S-1.0-XX-R	单位 UNITS	mm
材料 MATERIAL		页次 SHEET	1/1