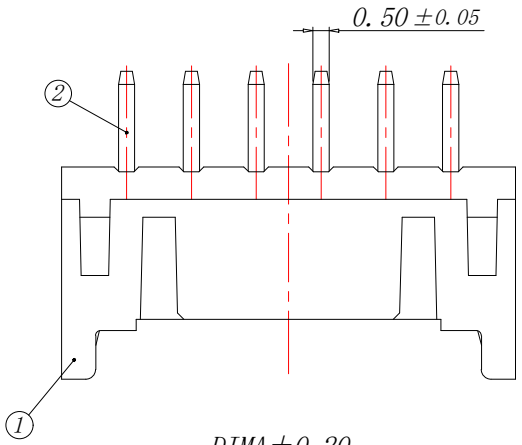

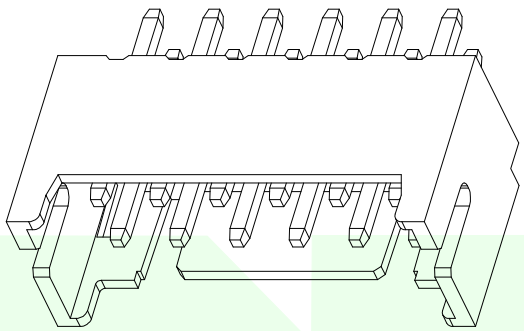

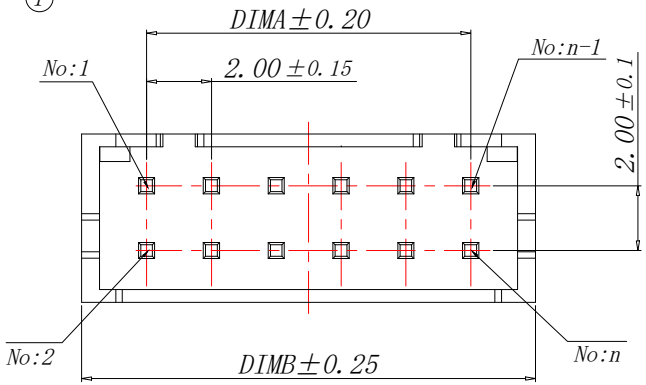

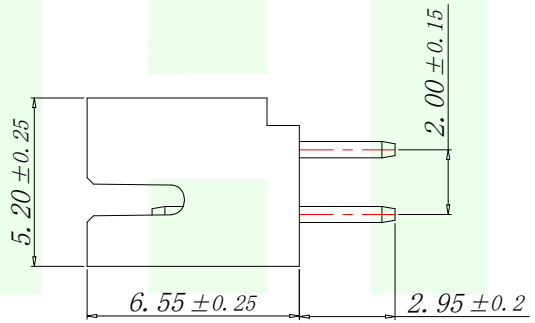

技术指标(Technical Index):

1. 工作温度(Temperature range):-40° C～+105° C.
2. 额定电压(Rated voltage):250V DC/AC(rms).
3. 额定电流(Rated current):3.0A AC,DC.
4. 接触电阻(Contact resistance):≤20mΩ.
5. 耐压值(Dielectricwithstanding voltage): 800V AC/minute.
6. 绝缘电阻(Insulation resistance):≥1000MΩ.

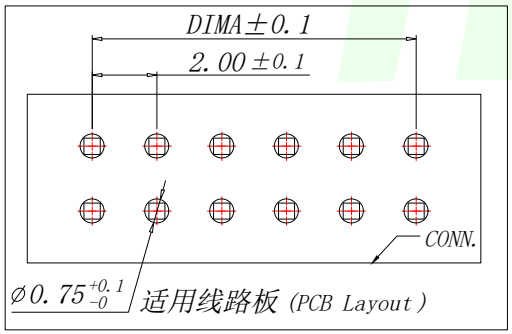

Part No	CKT	A	B
HMT-PHD2.0-4P-ZZ	2*2	2.0	6.0
HMT-PHD2.0-6P-ZZ	2*3	4.0	8.0
HMT-PHD2.0-8P-ZZ	2*4	6.0	10.0
HMT-PHD2.0-10P-ZZ	2*5	8.0	12.0
HMT-PHD2.0-12P-ZZ	2*6	10.0	14.0
HMT-PHD2.0-14P-ZZ	2*7	12.0	16.0
HMT-PHD2.0-16P-ZZ	2*8	14.0	18.0
HMT-PHD2.0-18P-ZZ	2*9	16.0	20.0
HMT-PHD2.0-20P-ZZ	2*10	18.0	22.0
HMT-PHD2.0-22P-ZZ	2*11	20.0	24.0
HMT-PHD2.0-24P-ZZ	2*12	22.0	26.0
HMT-PHD2.0-26P-ZZ	2*13	24.0	28.0
HMT-PHD2.0-28P-ZZ	2*14	26.0	30.0
HMT-PHD2.0-30P-ZZ	2*15	28.0	32.0
HMT-PHD2.0-32P-ZZ	2*16	30.0	34.0
HMT-PHD2.0-34P-ZZ	2*17	32.0	36.0
HMT-PHD2.0-36P-ZZ	2*18	34.0	38.0
HMT-PHD2.0-38P-ZZ	2*19	36.0	40.0
HMT-PHD2.0-40P-ZZ	2*20	38.0	42.0

序号	品名	材质
1	PHD2.0直针WTB 胶芯	PA66加玻纤 UL94 V-0 米色
2	PHD2.0直针WTB 端子	铜合金/表面镀锡

GENERAL TOLERANCES UNLESS SPECIFIED

X.±0.50	±1°
.X±0.20	
.XX±0.10	

MANUFACTURE DWG

HMT CONN 深圳市华明通电子有限公司 Shenzhen Huamingtong Electronics Co., Ltd

PART NO. HMT-PHD2.0-NP-ZZ

TITLE: PHD2.0 双排直插WTB

DESIGN: James

CHED: Talen

APPD: Sophia

CUSTOMER

SIZE	UNITS
A4	MM
SCALE	SHEET
N:A	1/1