CND-tek
磁联达

HX2260FNL T-CND

EN

10/100M Single Port Transformer Module

1. Compatible with various 10/100 Base-TX transceiver requiring 1:1 transmit and receive turns ratio
2. Compliant with IEEE 802.3 standard including baseline wander compensation specification of 350μH OCL when Biased at 8mA
3. Low profile Surface Mount Packaging designed for Hi-Temp Reflow Process
4. Single channel interface for 10/100Mbps Ethernet applications with CMC's tuned to Enhance EMC system performance
5. Operating Temperature range: -40℃ TO +85℃
6. Storage temperature range: -40℃ TO +125℃

DIMENSIONS & SCHEMATICS

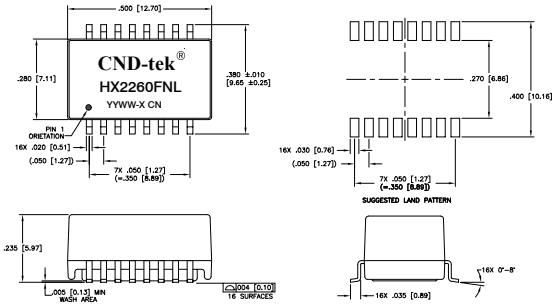

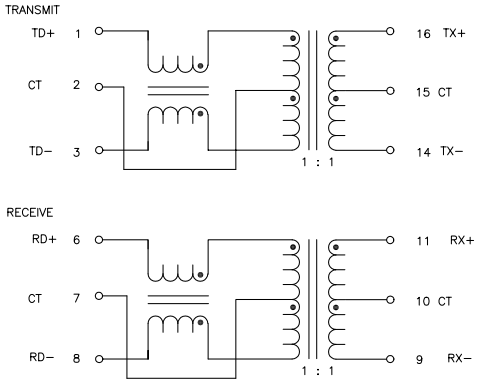

Note: 1、Dimension：mm/inch, 2.Unless otherwise specified,tolerances are: ±0.25mm

TECHNICAL SPECIFICATIONS

OCL :	350 μH Min. @ 100 KHz, 100mV with 8mA DC Bias
Leakage	0.5 μH Max. @ 100KHz, 0.1V
Inductance: Cw/w:	25pF Max. @ 100KHz, 0.1V
DCR:	1.00 Ω Max.
Turns Ratio(±2%):	1CT:1CT
Insertion Loss:	-1.2 dB Max. @ 0.1MHz
Return Loss:	-0.2-0.002*$f^{1.4}$ dB Max@ 1-125MHz -16 dB Min.@ 1-30 MHz -10+20*$\log_{10}$ (f/60)dB Min@ 30-60 MHz -10 dB Min.@ 60-80 MHz
Cross Talk:	-50dB Min. @ 1MHz -55+22*log10 (f/10)dB Min@ 10-100 MHz
Common Mode Rejection :	-50dB Min.@ 2MHz -43+22*log10 (f/30)dB Min@ 30-200 MHz
Isolation HI-POT:	1500Vrms 1mA 60Second

PACKING SPECIFICATION

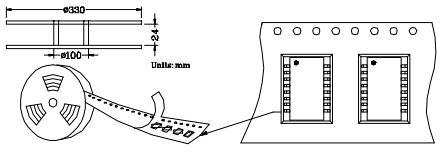

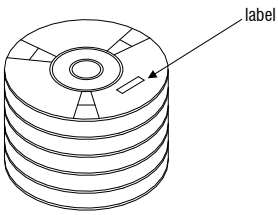

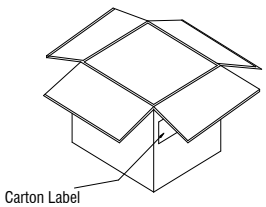

1. units/reel:600PCS
2. reel/carton:7PCS
3. units/carton :4200PCS

EXPORT CARTON:367(L)x337(W)x235(H)