CND-tek
磁联达

T1SB01 24T-CND

EN

10G Single Port Transformer Module

1. Designed for long haul 10G Single Port Transformer Module
2. Low profile Surface Mount Packaging designed for Hi-Temp Reflow Process
3. Compliant with IEEE 802.3an standard for 10G Base-Z,Designed to support 1:1 Turns Ratio Transceivers.
4. Operating Temperature : -40°C to +85°C
5. Storage Temperature : -40°C to +125°C

DIMENSIONS & SCHEMATICS

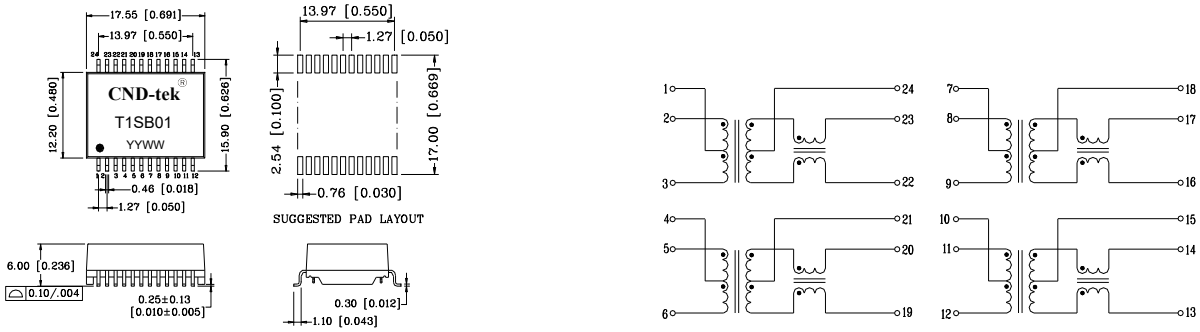

Note: 1. Dimension: mm/inch;
2.Unless otherwise specified,tolerances are: ±0.25mm;

TECHNICAL SPECIFICATIONS

OCL :	100 μH Min @ 100 KHz, 0.1V with 8mA DC Bias
Leakage Inductance:	0.5 μH Max @ 100KHz, 0.1V
Cw/w:	28pF Max @ 100KHz, 0.1V
DCR:	1.00Ω Max
Turns Ratio(±5%):	1CT:1(TX), 1CT:1(RX)
Insertion Loss:	-1.0 dB Max @ 1-300 MHz -1.5 dB Max @ 400 MHz -2.0 dB Max @ 500 MHz
Return Loss:	-18dB Min @1-40MHz -(18-10 $\log_{10}$(f /40))dB Min @ 40-400MHz -(8-30 $\log_{10}$(f /400))dB Min @ 400-500 MHz
Cross Talk:	-40dB Min@ 1-100 MHz -30 dB Min @ 100-500 MHz
Common Mode Rejection :	-30dB Min.@ 1-250 MHz -22dB Min.@ 250-500 MHz
Isolation HI-POT:	1500Vrms 1mA 1Second

PACKING SPECIFICATION

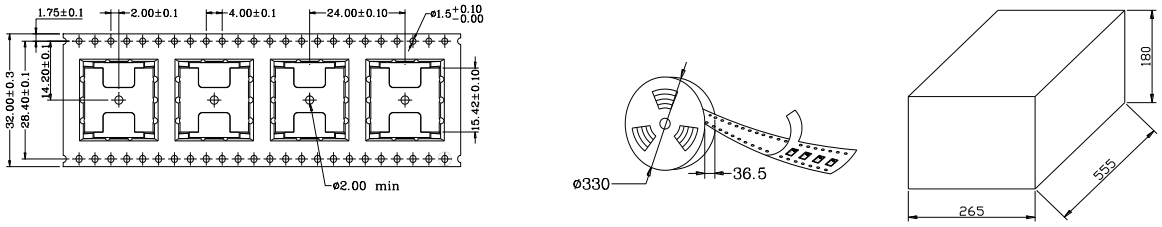

1. units/reel:350PCS
2. reel/carton:5PCS
3. units/carton :1750PCS