SMBJ Series

Features:

- For surface mounted applications in order to optimize board space.
- Low profile package
- Glass passivated junction
- Low inductance
- Plastic package has Underwriters Laboratory Flammability

DO-214AA
(SMB)

PINNING

PIN	DESCRIPTION
1	Cathode
2	Anode

Simplified outline SMB and symbol

Maximum Ratings and Thermal Characteristics **(TA=25℃** *unless otherwise noted)*

Parameter	Symbol	Value	Unit
Peak Pulse Power Dissipation on 10/1000 s waveform (Note1,Note2, Fig.1).	P_{PPM}	600	W
Peak Forward Surge Current,8.3ms Single Half Sine-Wave Superimposed on Rated Load, (JEDEC Method) (Note 3,Fig4).	I_{FSM} (UNI)	100	A
Peak Pulse Current on 10/1000 us waveform (Note 1, Fig 3)	I_{PPM}	see Table 1	A
Typical Junction capacitance at VR=4V, f=1MHz	C_J	390	pF
ESD Voltage per IEC6100-4-2 Contact Air	V_{ESD1} V_{ESD2}	±30 ±30	kV
Typical Thermal Resistance Junction to Ambient(Note 2)	$R_{\theta JA}$	100	°C/W
Operating Junction Temperature and Storage Temperature Range	T_j, T_{stg}	-65 ~ +150	°C

NOTES:

1. Non-repetitive current pulse, per Fig.3 and derated above T_A = 25°C per Fig. 2.
2. Mounted on 5 mm^2 (0.13mm thick) land areas.
3. Measured on 8.3ms,single half sine-wave or equivalent square wave,duty cycle=4 pulses per minute maximum.
4. Peak pulse power waveform is 10/1000μS.

Characteristics at Ta = 25°C

Table 1

Type		Reverse Stand-off Voltage	Breakdown Voltage		Test Curre		ıp	Peak Pulse Current	Package SMB	
			V_{BR} @ I_T							
		V_{RMW}	Min	Max	I_T	Reverse Leakage	V_C @ I_{PP}	I_{PP}	Device Marking Ccode	
UNI	BI	V	V	V	mA	μA	V	A	UNI	BI
600W Transient Voltage Suppresso										
SMBJ5.0A	SMBJ5.0CA	5	6.4	7	10	800	9.2	65.3	KE	AE
SMBJ6.0A	SMBJ6.0CA	6	6.67	7.37	10	800	10.3	58.3	KG	AG
SMBJ6.5A	SMBJ6.5CA	6.5	7.22	7.98	10	500	11.2	53.6	KK	AK
SMBJ7.0A	SMBJ7.0CA	7	7.78	8.6	10	200	12.0	50.0	KM	AM
SMBJ7.5A	SMBJ7.5CA	7.5	8.33	9.21	1	100	12.9	46.6	KP	AP
SMBJ8.0A	SMBJ8.0CA	8	8.89	9.83	1	50	13.6	44.2	KR	AR
SMBJ8.5A	SMBJ8.5CA	8.5	9.44	10.4	1	20	14.4	41.7	KT	AT
SMBJ9.0A	SMBJ9.0CA	9	10	11.1	1	10	15.4	39.0	KV	AV
SMBJ10A	SMBJ10CA	10	11.1	12.3	1	5	17.0	35.3	KX	AX
SMBJ11A	SMBJ11CA	11	12.2	13.5	1	1	18.2	33.0	KZ	AZ
SMBJ12A	SMBJ12CA	12	13.3	14.7	1	1	19.9	30.2	LE	BE
SMBJ13A	SMBJ13CA	13	14.4	15.9	1	1	21.5	28.0	LG	BG
SMBJ14A	SMBJ14CA	14	15.6	17.2	1	1	23.2	25.9	LK	BK
SMBJ15A	SMBJ15CA	15	16.7	18.5	1	1	24.4	24.6	LM	BM
SMBJ16A	SMBJ16CA	16	17.8	19.7	1	1	26.0	23.1	LP	BP
SMBJ17A	SMBJ17CA	17	18.9	20.9	1	1	27.6	21.8	LR	BR
SMBJ18A	SMBJ18CA	18	20	22.1	1	1	29.2	20.6	LT	BT
SMBJ20A	SMBJ20CA	20	22.2	24.5	1	1	32.4	18.6	LV	BV
SMBJ22A	SMBJ22CA	22	24.4	26.9	1	1	35.5	16.9	LX	BX
SMBJ24A	SMBJ24CA	24	26.7	29.5	1	1	38.9	15.5	LZ	BZ
SMBJ26A	SMBJ26CA	26	28.9	31.9	1	1	42.1	14.3	ME	CE
SMBJ28A	SMBJ28CA	28	31.1	34.4	1	1	45.4	13.3	MG	CG
SMBJ30A	SMBJ30CA	30	33.3	36.8	1	1	48.4	12.4	MK	CK
SMBJ33A	SMBJ33CA	33	36.7	40.6	1	1	53.3	11.3	MM	CM
SMBJ36A	SMBJ36CA	36	40	44.2	1	1	58.1	10.4	MP	CP
SMBJ40A	SMBJ40CA	40	44.4	49.1	1	1	64.5	9.3	MR	CR
SMBJ43A	SMBJ43CA	43	47.8	52.8	1	1	69.4	8.7	MT	CT
SMBJ45A	SMBJ45CA	45	50	55.3	1	1	72.7	8.3	MV	CV
SMBJ48A	SMBJ48CA	48	53.3	58.9	1	1	77.4	7.8	MX	CX
SMBJ51A	SMBJ51CA	51	56.7	62.7	1	1	82.4	7.3	MZ	CZ
SMBJ54A	SMBJ54CA	54	60	66.3	1	1	87.1	6.9	NE	DE
SMBJ58A	SMBJ58CA	58	64.4	71.2	1	1	93.6	6.5	NG	DG
SMBJ60A	SMBJ60CA	60	66.7	73.7	1	1	96.8	6.2	NK	DK
SMBJ64A	SMBJ64CA	64	71.1	78.6	1	1	103.0	5.9	NM	DM
SMBJ70A	SMBJ70CA	70	77.8	86	1	1	113.0	5.3	NP	DP
SMBJ75A	SMBJ75CA	75	83.3	92.1	1	1	121.0	5.0	NR	DR
SMBJ78A	SMBJ78CA	78	86.7	95.8	1	1	126.0	4.8	NT	DT
SMBJ85A	SMBJ85CA	85	94.4	104	1	1	137.0	4.4	NV	DV
SMBJ90A	SMBJ90CA	90	100	111	1	1	146.0	4.1	NX	DX
SMBJ100A	SMBJ100CA	100	111	123	1	1	162.0	3.7	NZ	DZ
SMBJ110A	SMBJ110CA	110	122	135	1	1	177.0	3.4	PE	EE
SMBJ120A	SMBJ120CA	120	133	147	1	1	193.0	3.1	PG	EG
SMBJ130A	SMBJ130CA	130	144	159	1	1	209.0	2.9	PK	EK
SMBJ150A	SMBJ150CA	150	167	185	1	1	243.0	2.5	PM	EM
SMBJ160A	SMBJ160CA	160	178	197	1	1	259.0	2.3	PP	EP
SMBJ170A	SMBJ170CA	170	189	209	1	1	275.0	2.2	PR	ER
SMBJ180A	SMBJ180CA	180	201	222	1	1	292.0	2.1	PT	ET
SMBJ188A	SMBJ188CA	188	209	231	1	1	304.0	2.0	PB	EB
SMBJ200A	SMBJ200CA	200	224	247	1	1	324.0	1.9	PV	EV
SMBJ220A	SMBJ220CA	220	246	272	1	1	356.0	1.7	PX	EX
SMBJ250A	SMBJ250CA	250	279	309	1	1	405.0	1.5	PZ	EZ
SMBJ300A*	SMBJ300CA*	300	335	371	1	1	486.0	1.3	QE	FE
SMBJ350A*	SMBJ350CA*	350	391	432	1	1	567.0	1.1	QG	FG
SMBJ400A*	SMBJ400CA*	400	447	494	1	1	648.0	0.9	QK	FK
SMBJ440A*	SMBJ440CA*	440	492	543	1	1	713.0	0.9	QM	FM

Typical Characteristics

Fig.1 Peak Pulse Power Rating Curve

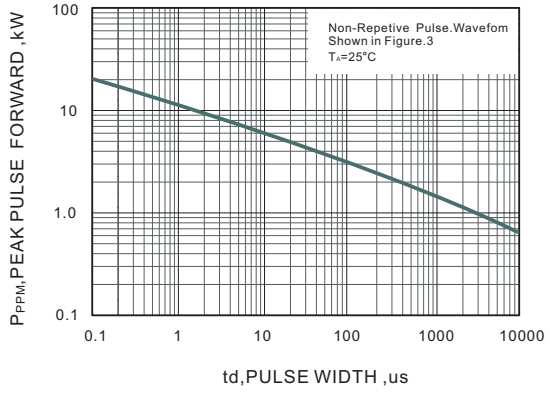

Fig.2 Forward Current Derating Curve

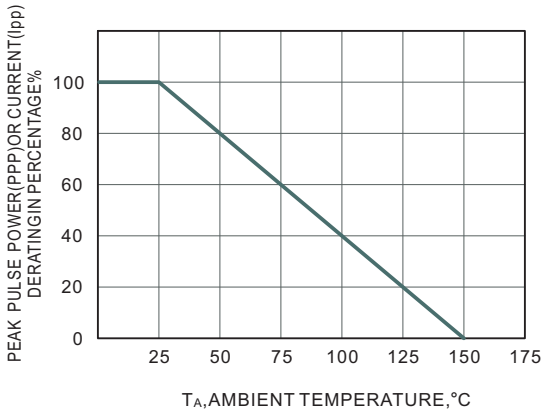

Fig.3 Pulse Waveform

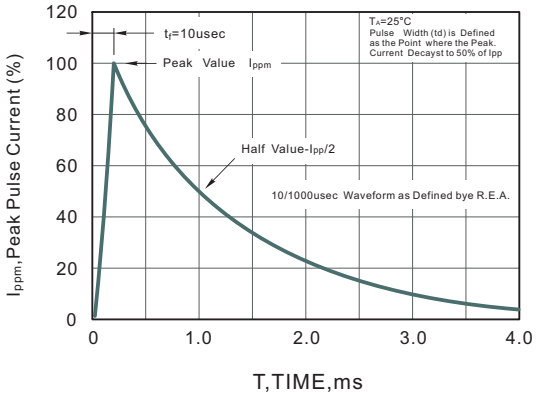

Fig.4 Maximum Non-Repetitive Peak Forward Surge Current

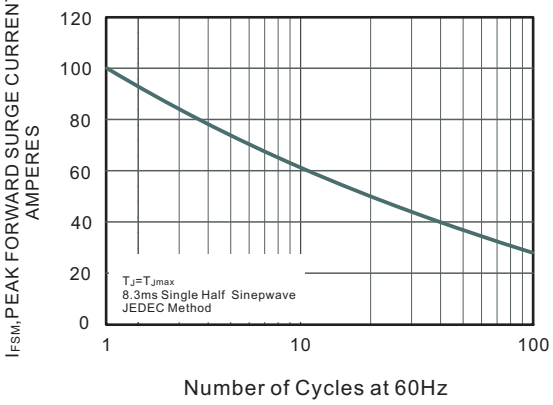

Package Dimension

DO-214AA (SMB)

Units：mm

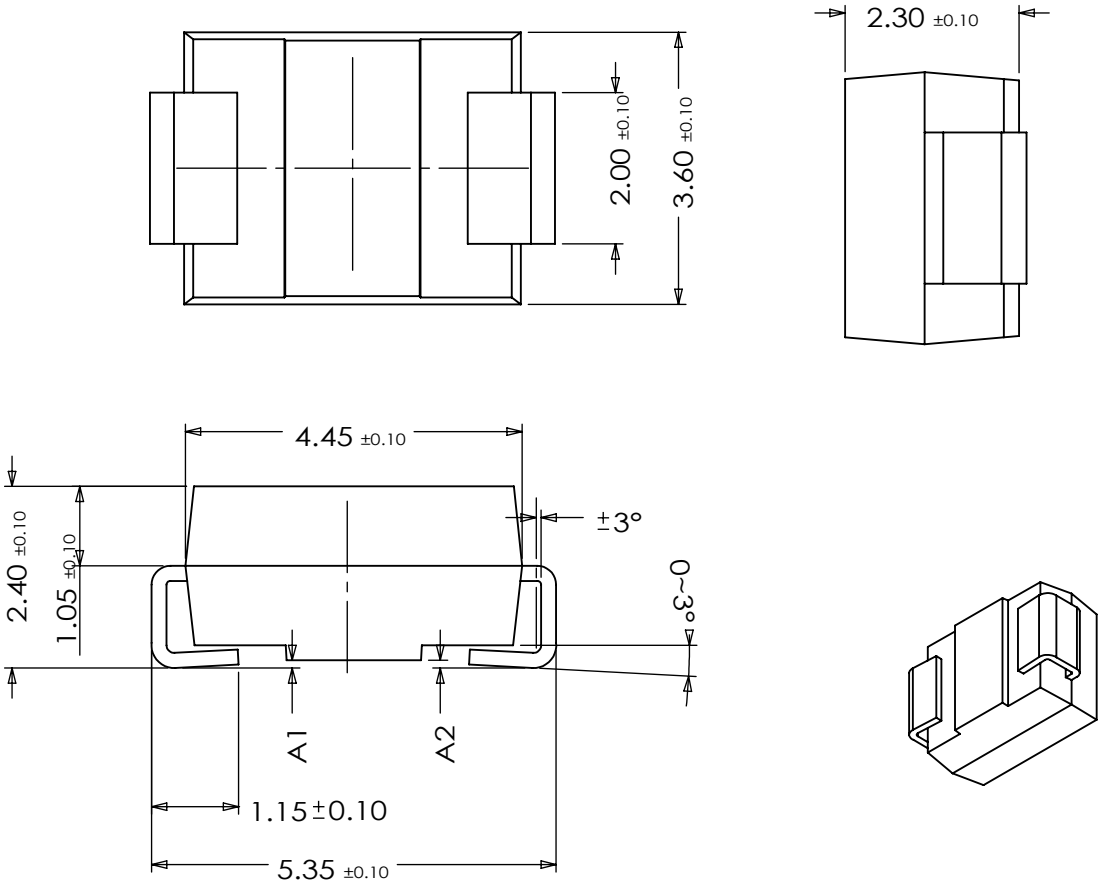

技术要求：

1. A1-A2<0.10；