ROHS

REV.	ECN NO.	DESCRIPTION	DRAW	DATE

SPECIFICATIONS:

1.MECHANICAL:
- CARD PUSH INSERTION/OUT FORCE:1.0~4.0KG
- DURABILITY: 5000 CYCLES

2.ELECTRICAL:
- CURRENT RATING: 0.5A
- WITHSTANDING VOLTAGE: 500V AC R.M.S.
- CONTACT RESISTANCE: 100M MAX.
- INSULATION RESISTANCE: 100M MIN.

3.ENVIRONMENTAL
- TEMPERATURE RANGE −40°C ~ +85°C

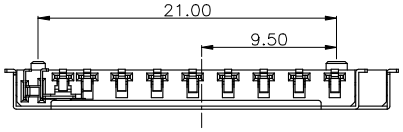

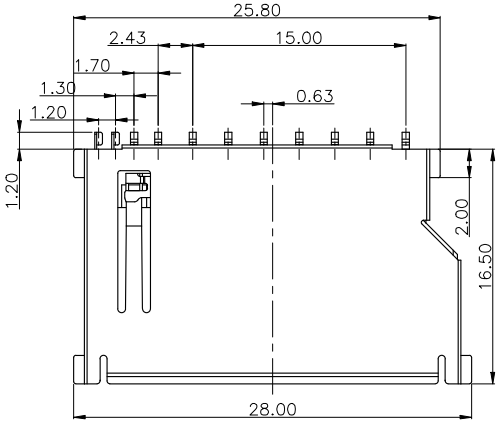

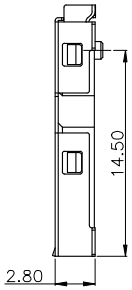

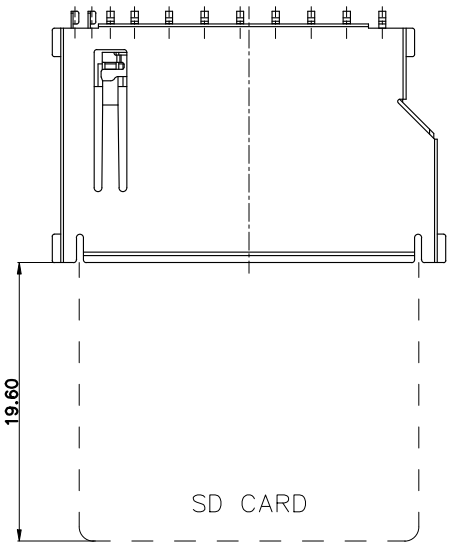

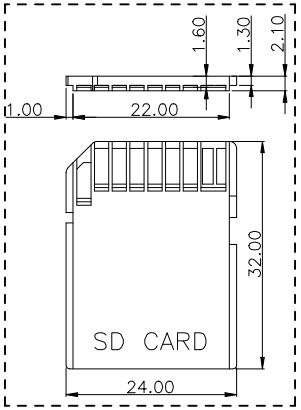

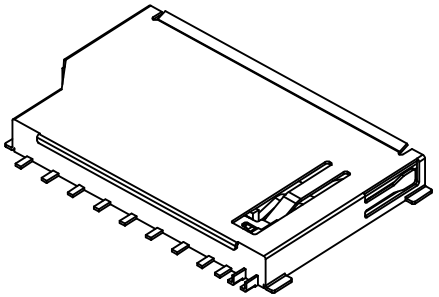

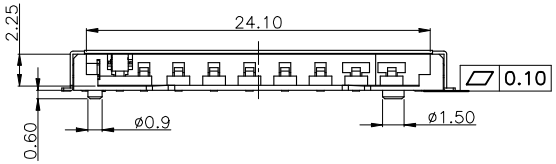

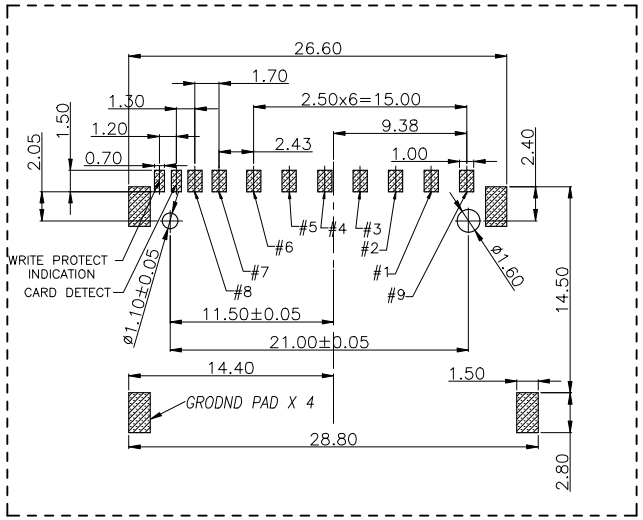

PAD AREA

KEEP OUT AREA

RECOMMENDED PCB LAYOUT

GENERAL TOLERANCE ±0.05

SD CARD PIN DEFINE

Pin#	Name	Type	Description
1	CD/DAT3	I/O/PP	Card Detelct/ Date Line[Bit3]
2	CMD	PP	Command/Response
3	Vss1	S	Supply voltage ground
4	VDD	S	Supply voltage
5	CLK	I	Clock
6	Vss2	S	Supply voltage ground
7	DAT0	I/O/PP	Date Line [Bit0]
8	DAT1	I/O/PP	Date Line [Bit1]
9	DAT2	I/O/PP	Date Line [Bit2]
10	CD		CARD DETECT
11	WP		WRITE PROTECT

CIRCUIT:

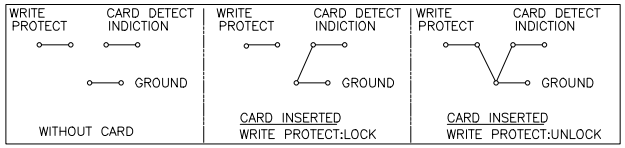

NO	DESCRIPTION	QTY	MATERIAL	PLATING & COLOR
C	SHIELD	1	STAINLESS STEEL 0.20t	Ni PLATING
B	CONTACT	11	COPPER ALLOY 0.20t	Gold Flash On Contact Area Matte-Tin plated on Solder tail All over Nickel Plated .
A	HOUSING	1	THERMOPLASTIC UL94-V0	WHITE

COSTOMER DRAWING

DRAWING

CHECK

APPROVAL

TOLERANCES ARE

30-150	±0.35	ANGLE
10-30	±0.2	
5-10	±0.15	±3°
0-5	±0.1	

LAILAN 深圳市莱联电子有限公司
SHENZHEN LAILIAN ELECTRONICS CO.,LTD

TITLE	SD存储卡卡座T2.8（插拔式卡）	REV.	A
PART NO.	LAIL-SD02-T2.8-B	UNITS	mm
DWG.NO.		Projection	