SURGiNG
紹 鑫 實 業

Voltage Dependent Resistor

压敏电阻

25Dmm Series

Metal Oxide Varistors - 25Dmm Series

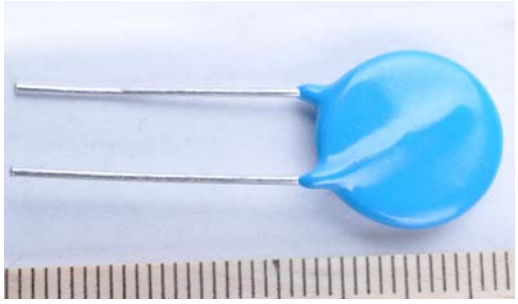

Features

1. Wide operating voltage (V1mA) range from 8V to 1800V.
2. Fast responding to transient over-voltage.
3. Large absorbing transient energy capability.
4. Low clamping ratio and no following-on current.

General Information

The MOV-25DxxxK Series of 25mm radial leaded varistor devices protects against overvoltage transients such as lightning, power contact and power induction. The metal oxide varistors offer a choice of varistor voltages from 18 V to 1800 V and Vrms voltages from 11 V to 1000 V. The devices have a high current handling, high energy absorption capability and fast response times to protect against transient faults up to rated limits.

General Characteristics

No Radioactive Material Storage Temperature: -55ºC to +125ºC
Operating Temperature: -55ºC to +85ºC
Body: Nickel Plated
Leads: Surface-mount, Axial Devices: Tin Plated
Devices with No Leads: Nickel Plated

Product Name

2	5	D	4	7	1	K

Disc Diameter
25=25MM

Type
D: Disk
S: Square

Nominal Varistor Voltage
471=47*10^1V

Varistor Voltage Tolerance
K = 10 %

Metal Oxide Varistors - 25Dmm Series

Electriacl Characteristics

Type Number		Maximum Allowable Voltage		Varistor Voltage	Maximum Clamping Voltage		Withstanding Surge Current	Maximum Energy (10/1000μs)	Typical Capacitance (Reference)
Standard	High Surge	V_{AC}(V)	V_{DC}(V)	V_{1mA}(V)	I_P(A)	V_C(V)	I(A)	(J)	@1KHz(pf)
25D180K	25D180KJ	11	14	18(15~21.6)	30	36	4500	20	45000
25D220K	25D220KJ	14	18	22(19.5~26)	30	43	4500	25	29000
25D270K	25D270KJ	17	22	27(24~30)	30	53	4500	30	26500
25K330K	25K330KJ	20	26	33(29.5~36.5)	30	65	4500	35	18000
25D390K	25D390KJ	25	31	39(35~43)	30	77	4500	40	13500
25D470K	25D470KJ	30	38	47(42~54)	30	93	4500	50	11500
25D560K	25D560KJ	35	45	56(50~62)	30	100	4500	60	10500
25D680K	25D680KJ	40	56	68(61~75)	30	135	4500	70	9050
25D820K	25D820KJ	50	65	82(74~90)	150	135	15000	80	7700
25D101K	25D101KJ	60	85	100(90~110)	150	165	15000	100	6300
25D121K	25D121KJ	75	100	120(108~132)	150	200	15000	120	5200
25D151K	25D151KJ	95	125	150(135~165)	150	250	15000	160	4300
25D181K	25D181KJ	115	150	180(162~198)	150	300	15000	175	3500
25D201K	25D201KJ	130	170	200(180~220)	150	340	15000	190	3200
25D221K	25D221KJ	140	180	220(198~242)	150	360	15000	200	2900
25D241K	25D241KJ	150	200	240(216~264)	150	395	15000	220	2650
25D271K	25D271KJ	175	225	270(243~297)	150	455	15000	255	2400
25D301K	25D301KJ	190	250	300(270~330)	150	500	15000	275	2100
25D331K	25D331KJ	210	275	330(297~363)	150	550	15000	300	1900
25D361K	25D361KJ	230	300	360(324~396)	150	595	15000	330	1750
25D391K	25D391KJ	250	320	390(351~429)	150	650	15000	360	1600
25D431K	25D431KJ	275	350	430(387~473)	150	710	15000	380	1500
25D471K	25D471KJ	300	385	470(423~517)	150	775	15000	400	1400
25D511K	25D511KJ	320	415	510(459~561)	150	845	15000	420	1250
25D561K	25D561KJ	350	460	560(504~616)	150	925	15000	440	1150
25D621K	25D621KJ	385	505	620(558~682)	150	1025	15000	460	1050
25D681K	25D681KJ	420	560	680(612~748)	150	1120	15000	450	950
25D751K	25D751KJ	460	615	750(675~825)	150	1240	15000	510	850
25D781K	25D781KJ	485	640	780(702~858)	150	1290	15000	530	800
25D821K	25D821KJ	510	670	820(738~902)	150	1355	15000	570	700
25D911K	25D911KJ	550	745	910(819~1001)	150	1500	15000	620	650
25D102K	25D102KJ	625	825	1000(900~1100)	150	1650	15000	685	600
25D112K	25D112KJ	680	895	1100(990~1210)	150	1815	15000	770	550
25D122K	25D122KJ	750	990	1200(1080_1320)	150	1980	15000	850	500
25D182K	25D182KJ	1000	1465	1800(1620~1980)	150	2970	15000	970	450

Metal Oxide Varistors - 25Dmm Series

Current Energy and Power Dissipation Ratings

Should transients occur in rapid succession, the average power dissipation is the energy (watt-seconds) per pulse times the number of pulses per second. The power so developed must be within the specifications shown on the Device Ratings and Specifications Table for the specific device. The operating values of a MOV need to be derated at high temperatures as shown above. Because varistors only dissipate a relatively small amount of average power they are not suitable for repetitive applications that involve substantial amounts of average power dissipation.

Figure 1A - Power Derating for Epoxy Coated

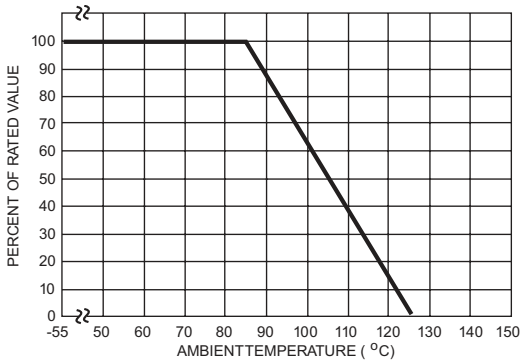

Figure 1B - Power Derating for Pholenic Coated

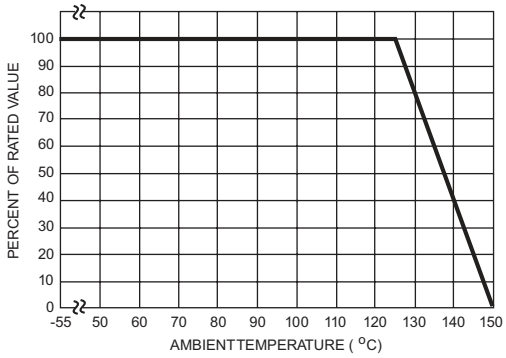

Peak Pulse Current Test Waveform

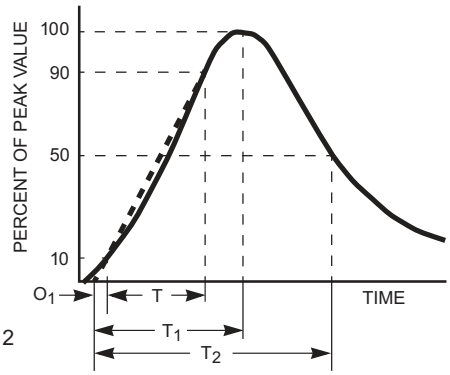

Figure 2

0_1 = Virtual Origin of Wave
T = Time from 10% to 90% of Peak
T_1 = Rise Time = 1.25 x T
T_2 = Decay Time
Example - For an 8/20 μs Current Waveform:
8μs = T_1 = Rise Time
20μs = T_2 = Decay Time

Packaging

Part Number	Component Package	Quantity	Packaging Option	Packaging Specification
25D	25.0	200	BOX	400PCS

Structures and Dimensions

TVA 25 Type

Unit:mm

GKGE

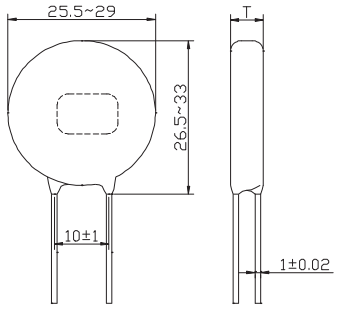

BKBL

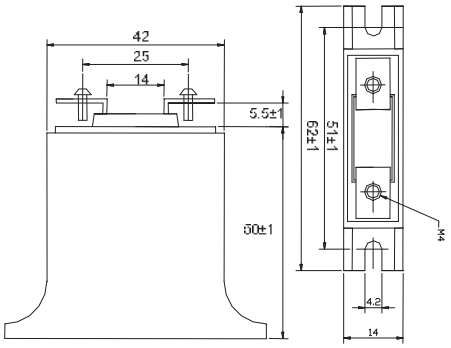

QAFE

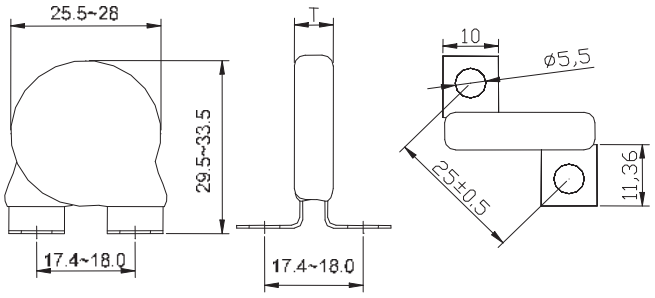

QBOE

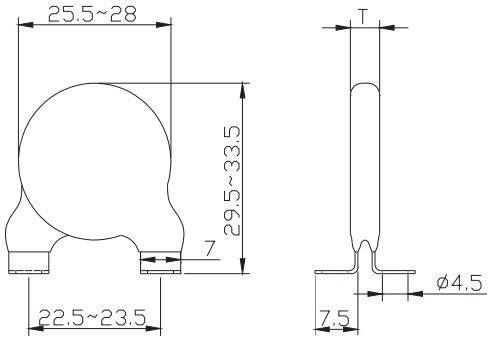

QBSE

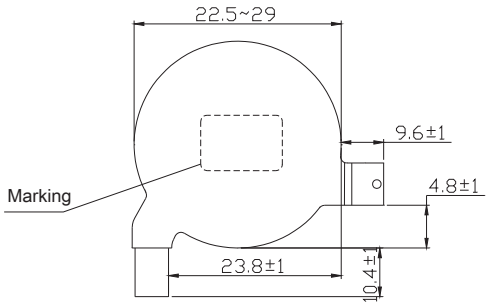

QCDD

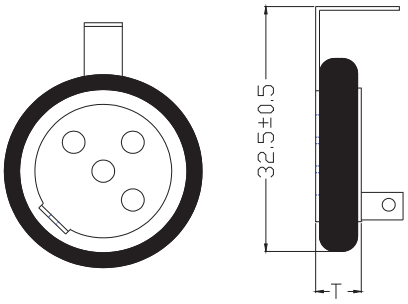

QCDE

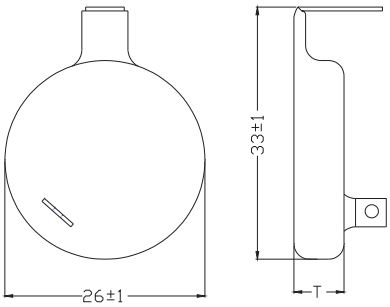

QCFE

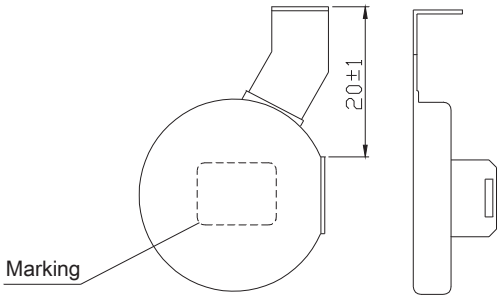

Note 1: T is the thickness of the product.
Note 2: The specifications of thickness are available upon request.

Structures and Dimensions

TVA 25 Type

Unit:mm

QCGE

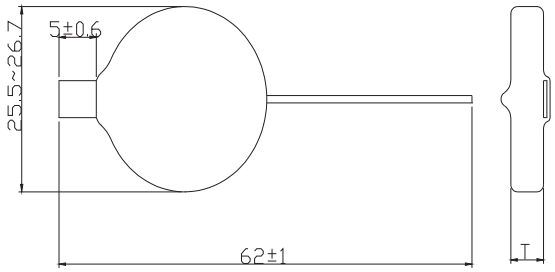

QDBD

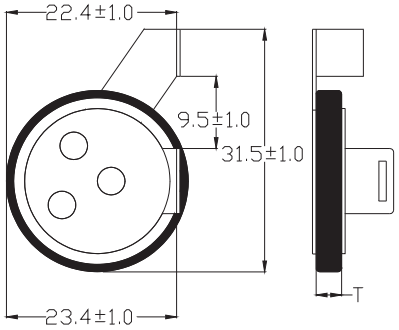

QDBE

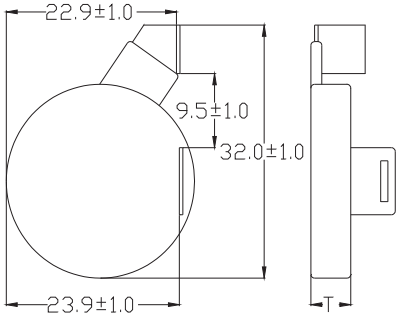

QEPE

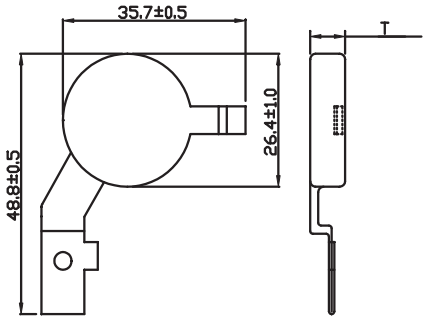

QGKE

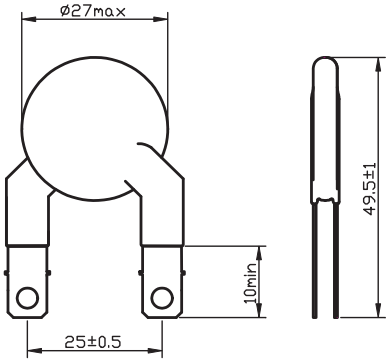

QHHD

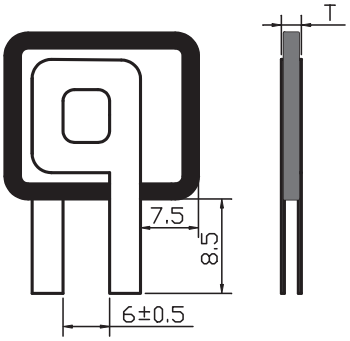

QHRE

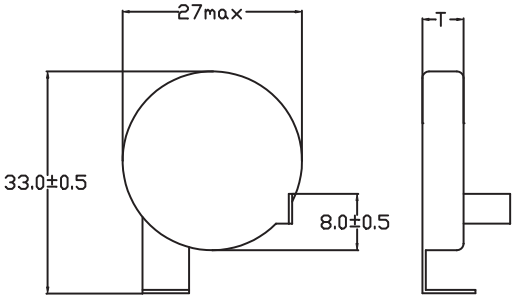

Note 1: T is the thickness of the product.
Note 2: The specifications of thickness are available upon request.