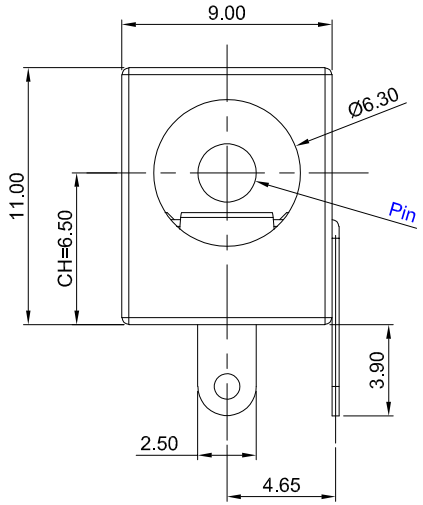

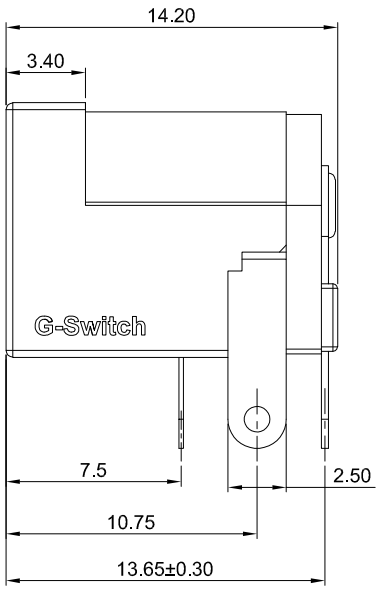

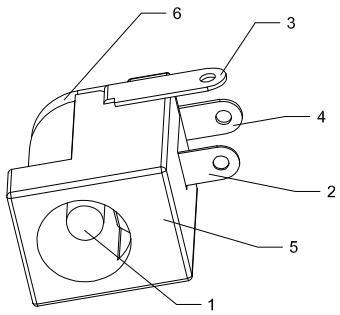

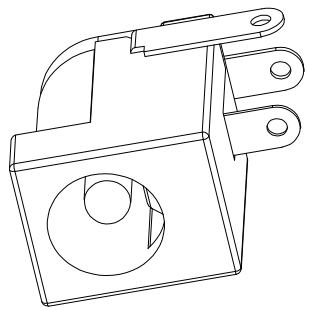

DC - S 039 A - DXXX - 5A

G-Switch

Interface Type
S=Socket

Product No

Detail
A=Three Feet

Needle Diameter
D020=2.0mm
D025=2.5mm

Electric Current

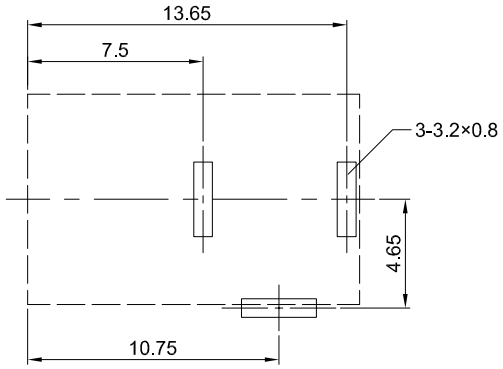

PCB REFERENCE DIAGRAM
TOLERANCE:±0.05

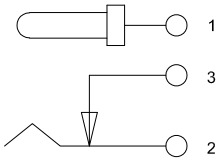

CIRCUIT DIAGRAM

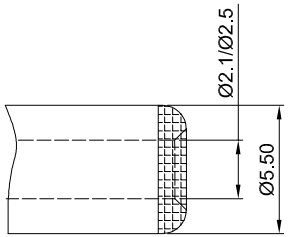

MATING PLUG

G-Switch Specification:

1.Operating temperature range: -40°C ~ +85°C
2.Rated load：5A.20V DC
3.Insulation resistance: 100MΩ min
4.Withstand voltage: 500V AC/min
5.Contact resistance: 30mΩ max
6.Durability cycle: 5000 Cycles
7.Insertion and extraction force: 3-30N

NO.	PART NAME	MATERIAL	REMARK
6	COVER	PA66 BROIL850 UL94V-0	BLACK
5	HOUSING	PA66 BROIL850 UL94V-0	BLACK
4	FLAT PLATE	COPPER ALLOY	Cu Tin PLATED
3	BENDING PIECE	COPPER ALLOY	Cu Tin PLATED
2	REED	PHOSPHOR COPPER	Tin PLATED
1	PIN	COPPER ALLOY	Cu Tin PLATED

Pb Process Capable

RoHS Compliant
EU RoHS Standards

SCALE: 1:1	UNIT: mm	Title:	Horizontal DC Power Jack 5525/5521 DIP CH=6.5 Ø2.0/2.5mm
SIZE: A4			
Unless otherwise General tolerance:		Molde Code:	DC-S039A-DXXX-5A
X. ±0.40 X.x ±0.30 X.xx ±0.20 X° ±3°		DRAWN: Wu	CHECKED: Xia
		APPROVED: Chen	DATE: 2025.05.19
		REV: A0	SHEET: 1/1

品赞科技 b-Switch ®
www.dg-switch.com